[redacted]

CRL
CENTRAL RESEARCH LIBRARY
DOCUMENT COLLECTION

AEC RESEARCH AND DEVELOPMENT REPORT

ORNL-2357 cy. 4
Chemistry-Separation Processes
for Plutonium and Uranium

DECLASSIFIED
CLASSIFICATION CHANGED TO: AEC 1-27-66
BY AUTHORITY OF: Ea Lackenmeister 2-17-66
BY:

MARTIN MARIETTA ENERGY SYSTEMS LIBRARIES
3 4456 0350519 7

RECOVERY OF URANIUM AND NEPTUNIUM-237 FROM CHALK RIVER URANYL NITRATE SOLUTION IN ORNL METAL RECOVERY PLANT

W. H. Lewis

CENTRAL RESEARCH LIBRARY
DOCUMENT COLLECTION
LIBRARY LOAN COPY
DO NOT TRANSFER TO ANOTHER PERSON
If you wish someone else to see this document, send in name with document and the library will arrange a loan.

This document contains Confidential Restricted Data relating to Civilian Applications of Atomic Energy.

OAK RIDGE NATIONAL LABORATORY
OPERATED BY
UNION CARBIDE NUCLEAR COMPANY
A Division of Union Carbide and Carbon Corporation
UCC
POST OFFICE BOX X · OAK RIDGE, TENNESSEE

[redacted]

Printed in USA. Charge 30 cents. Available from the U. S. Atomic Energy Commission, Technical Information Extension, P. O. Box 1001, Oak Ridge, Tennessee. Please direct to the same address inquires covering the procurement of other classified AEC reports.

LEGAL NOTICE

This report was prepared as an account of Government sponsored work. Neither the United States, nor the Commission, nor any person acting on behalf of the Commission:

A. Makes any warranty or representation, express or implied, with respect to the accuracy, completeness, or usefulness of the information contained in this report, or that the use of any information, apparatus, method, or process disclosed in this report may not infringe privately owned rights; or

B. Assumes any liabilities with respect to the use of, or for damages resulting from the use of any information, apparatus, method, or process disclosed in this report.

As used in the above, "person acting on behalf of the Commission" includes any employee or contractor of the Commission to the extent that such employee or contractor prepares, handles or distributes, or provides access to, any information pursuant to his employment or contract with the Commission.

[redacted]

ORNL-2357

Copy No. 4

CHEMICAL TECHNOLOGY DIVISION
Pilot Plant Section
Contract No. W-7405-Eng-26

RECOVERY OF URANIUM AND NEPTUNIUM-237 FROM CHALK RIVER URANYL NITRATE SOLUTION IN ORNL METAL RECOVERY PLANT

W. H. Lewis

Work by:

R. E. Brooksbank
G. D. Davis
C. D. Hylton
J. M. Lockmiller
D. E. Spangler
D. H. Summers
W. R. Whitson

Date Issued: AUG 13 1957

OAK RIDGE NATIONAL LABORATORY
Operated by
UNION CARBIDE NUCLEAR COMPANY
A Division of Union Carbide and Carbon Corporation
Post Office Box X
Oak Ridge, Tennessee

[redacted]

[redacted]

MARTIN MARIETTA ENERGY SYSTEMS LIBRARIES

3 4456 0350519 7

[redacted]

ORNL-2357
Chemistry-Separation Processes
for Plutonium and Uranium
M-3679 (19th ed.)

INTERNAL DISTRIBUTION

1. C. E. Center
2. Biology Library
3. Health Physics Library
4-5. Central Research Library
6. Reactor Experimental Engineering Library
7-11. Laboratory Records Department
12. Laboratory Records, ORNL R.C.
13. A. M. Weinberg
14. L. B. Emlet (K-25)
15. J. P. Murray (Y-12)
16. J. A. Swartout
17. E. H. Taylor
18. E. D. Shipley
19-20. F. L. Culler
21. M. L. Nelson
22. W. H. Jordan
23. C. P. Keim
24. J. H. Frye, Jr.
25. S. C. Lind
26. A. H. Snell
27. A. Hollaender
28. K. Z. Morgan
29. M. T. Kelley
30. T. A. Lincoln
31. R. S. Livingston
32. A. S. Householder
33. C. S. Harrill
34. C. E. Winters
35. D. W. Cardwell
36. D. Phillips
37. W. K. Eister
38. F. R. Bruce
39. D. E. Ferguson
40. R. B. Lindauer
41. H. E. Goeller
42. R. A. Charpie
43. J. A. Lane
44. M. J. Skinner
45. R. E. Blanco
46. G. E. Boyd
47. W. E. Unger
48. R. R. Dickison
49. A. T. Gresky
50. E. D. Arnold
51. C. E. Guthrie
52. J. W. Ullmann
53. K. B. Brown
54. K. O. Johnsson
55. H. M. McLeod
56. J. C. Bresee
57. C. W. Hancher
58. R. E. Brooksbank
59. J. R. Flanary
60. W. H. Lewis
61. W. W. Weinrich (consultant)
62. M. D. Peterson (consultant)
63. D. L. Katz (consultant)
64. G. T. Seaborg (consultant)
65. M. Benedict (consultant)
66. C. E. Larson (consultant)
67. L. Squires (consultant)
68. J. H. Rushton (consultant)
69. ORNL - Y-12 Technical Library, Document Reference Section

EXTERNAL DISTRIBUTION

70. Division of Research and Development, AEC, ORO
71-254. Given distribution as shown in M-3679 (19th ed.) under Chemistry-Separation Processes for Plutonium and Uranium category

[redacted]

[redacted]

CONTENTS

		Page
0.0	Abstract	1
1.0	Summary	1
2.0	Introduction	2
3.0	Description of Process	3
	3.1 Feed Preparation	3
	3.2 Solvent Extraction	3
	3.3 Product Handling	5
	3.4 Waste Handling	6
4.0	Solvent Extraction Losses and Material Balances	6
	4.1 Solvent Extraction Losses	6
	4.2 Material Balance	7
5.0	Decontamination and Product Purity	7
	5.1 Uranium Decontamination	7
	5.2 Uranium Purity	7
	5.3 Neptunium Product Purity	7
6.0	Neptunium Flowsheet Development	8
	6.1 Effect of Nitric Acid Concentration in the Extraction Column on Neptunium Extraction	8
	6.2 Effect of the Degree of Solvent Saturation with Uranium on Neptunium Extraction	8
	6.3 Effect of Reductant, Fe(II), in Scrub Solution on Neptunium Extraction	8
	6.4 Effect of Nitric Acid Concentration on Uranium-Neptunium Separation	10
	6.5 Effect of Sodium Nitrite in Scrub Solution on Neptunium Extraction	12
7.0	Proposed Modified Purex Flowsheet for the Recovery of Uranium, Plutonium and Neptunium from Irradiated Uranium	14

[redacted]

[redacted]

0.0 ABSTRACT

The processing of the third shipment of Chalk River uranyl nitrate solution by a modified Purex process resulted in the recovery of 7,334 kg of uranium and 3.5 g of Np-237. Limits of acid concentration, both for neptunium extraction and partitioning, were determined. The effect of oxidizing and reducing agents on the extraction of neptunium using a Purex flowsheet was investigated. Based on development work conducted during this program, a modified Purex flowsheet is proposed for recovering uranium, plutonium, and neptunium from irradiated uranium.

1.0 SUMMARY

The processing of the third batch of Chalk River uranyl nitrate solution resulted in the recovery of 7,334 kg of uranium and 3.5 g of Np-237. Uranium and neptunium recoveries based on solvent extraction losses were 99.8 and 88 per cent, respectively. After one cycle of solvent extraction the uranium met fission product and plutonium specifications for recovered uranium and was transferred to the Y-12 plant for conversion to UO_3. The neptunium product solution was transferred to the ORNL Chemistry Division for further purification.

A modified ORNL Purex uranium second-cycle flowsheet was used for recovering uranium and neptunium from the feed solution. Uranium and neptunium were co-extracted by 30 per cent tributyl phosphate solvent with a uranium solvent saturation of 75 per cent; the loss of neptunium on extraction was less than 1 per cent. The reductant, Fe^{++}, which was added to the extraction column to convert plutonium to the less extractable valence state, Pu(III), promoted the extraction of neptunium. When the reductant was omitted the neptunium extraction loss increased to over 80 per cent.

Neptunium was separated from the uranium in the partitioning contactor with 0.01 M HNO_3 solution. The flow rate of the partitioning solution was controlled to produce an aqueous stream leaving the contactor ~ 0.8 M HNO_3. Under this condition less than 1 per cent of the neptunium remained with the uranium, and only 0.001 per cent of the uranium remained with the neptunium. When the concentration of nitric acid in the aqueous phase (IBP) was increased to 1.4 M, more than 95 per cent of the neptunium remained with the uranium, indicating that the path of neptunium can be controlled in the Purex first cycle uranium-plutonium partitioning column.

One 67-hr column run was made to determine the extraction conditions required to promote neptunium extraction using the ORNL Purex first cycle chemical flowsheet. Results from this experiment indicated that the addition of sodium nitrite (0.05 M to the scrub) is required to promote the extraction of neptunium along with uranium and plutonium. The loss of neptunium on extraction was less than 1 per cent when sodium nitrite was added and increased to 100 per cent when the oxidant was removed.

[redacted]

Neptunium chemistry under Purex conditions is unique compared to plutonium in that neptunium can be extracted in the presence of an oxidizing or reducing agent but cannot be extracted without either. Evidently the presence of an oxidizing or a reducing agent prevents the formation of unextractable Np(V), which tends to form in the extraction contactors. This unique property of neptunium makes possible the formulation of a Purex chemical flowsheet for the simultaneous recovery of uranium, plutonium, and neptunium from irradiated uranium without affecting plutonium and uranium recovery and decontamination.

Based on the development work conducted during this program, a modified Purex flowsheet has been proposed for recovering neptunium, plutonium,and uranium from irradiated uranium. This flowsheet requires the addition of a neptunium-uranium partitioning contactor in the second uranium solvent extraction cycle. Other minor changes include the addition of sodium nitrite to the first-cycle extraction column and increasing the concentration of nitric acid in the first-cycle uranium and plutonium partitioning column to 1.2-1.4 M. The flowsheet can be tested for performance in existing production plants without extensive equipment modification. If the performance is good, the additional contactor can be added later. An outstanding advantage of this flowsheet is that neptunium is separated from uranium in the absence of fission products and plutonium.

2.0 INTRODUCTION

The United States Atomic Energy Commission purchased a special lot of depleted uranium in nitrate solution form from Atomic Energy of Canada, Limited in FY-1956. The uranium had been partially decontaminated from fission products and plutonium at Chalk River; however, further purification was required before the uranium could be used as feed for the gaseous diffusion plants. The uranyl nitrate solution was sent to the ORNL Metal Recovery Plant for additional purification.

Two shipments of solution were processed in FY-1956 and resulted in the recovery of 19.7 tons of uranium and 28 g of Np-237. The presence of large quantities of neptunium in the solution was discovered by routine analysis of the solution after it arrived at ORNL. Neptunium was recovered along with the uranium by solvent extraction, using a modified Purex flowsheet. The success of this recovery generated the hope that, with only slight modification of existing Purex flowsheets, Np-237 might be recovered routinely along with uranium and plutonium in Purex-type production plants.

The third and last shipment of Chalk River uranyl nitrate solution arrived at ORNL in February 1957; this shipment contained 7,454 kg of uranium and approximately 4.5 g of Np-237. The solution was processed in the Metal Recovery Plant in April 1957 to recover the uranium and neptunium. During this program development work was conducted to determine the feasibility of modifying existing Purex process flowsheets to permit the simultaneous recovery of neptunium, plutonium, and uranium from irradiated uranium.

This report describes the development work conducted on this last batch of uranyl nitrate solution.

3.0 DESCRIPTION OF PROCESS

Approximately 3500 gal of Chalk River uranyl nitrate solution containing 7454 kg of uranium and 4.5 g of neptunium was processed by a modified ORNL Purex uranium second-cycle flowsheet to recover and decontaminate uranium and neptunium from fission products and plutonium. The process consisted of the following major steps: (a) feed preparation, (b) one cycle of solvent extraction, (c) product concentration, and (d) waste handling.

3.1 Feed Preparation

The uranyl nitrate solution was shipped from Chalk River, Canada to the ORNL Metal Recovery Plant in a railroad tank car. The composition of the tank car solution was:

U	455 mg/ml	Gross γ	6.4×10^4 c/m/ml
HNO_3	0.27 M	Pu α	2.4×10^4 c/m/ml
Total ionic impurities (Ca, Al, Mg, Fe, Cr, Ni, Mn, Si, Cu)	119 ppm	Np α	223 c/m/ml

The solution was transferred from the tank car to the feed adjustment tanks where it was diluted with nitric acid and water to produce a feed with the average composition:

U	321 mg/ml	Gross γ	3.5×10^4 c/m/ml
HNO_3	2.1 M	Pu α	1.5×10^4 c/m/ml
		Np α	165 c/m/ml

3.2 Solvent Extraction

The chemical composition of the Chalk River uranyl nitrate solution was similar to Purex uranium second-cycle feed. The ORNL Purex uranium second-cycle chemical flowsheet (ORNL-1519) was therefore modified (Fig. 3.1) to permit recovery of the neptunium. A neptunium partitioning contactor was provided between the extraction and stripping contactors to separate the neptunium from the uranium. The ORNL Purex-type flowsheet was selected over other second-uranium-cycle flowsheets because the higher concentration of nitric acid (2.0 M) used in this flowsheet favors neptunium extraction.

Separation of Uranium and Neptunium from Plutonium and Fission Products. The gross separation of uranium and neptunium from fission products and plutonium was accomplished in the extraction column. This column was a 6.6-in.-i.d. pulsed column with 20 and 16 ft extraction and scrub heights, respectively. The column was operated with the aqueous phase continuous and at a total volume velocity of 400 gal/hr/ft^2. The feed solution entered near the middle of the column, solvent entered at the bottom, and the nitric acid scrub solution entered near the top. The uranium and neptunium were extracted from the feed solution by the solvent. Chemical conditions in the column were such that most of the fission products and plutonium remained with the aqueous feed

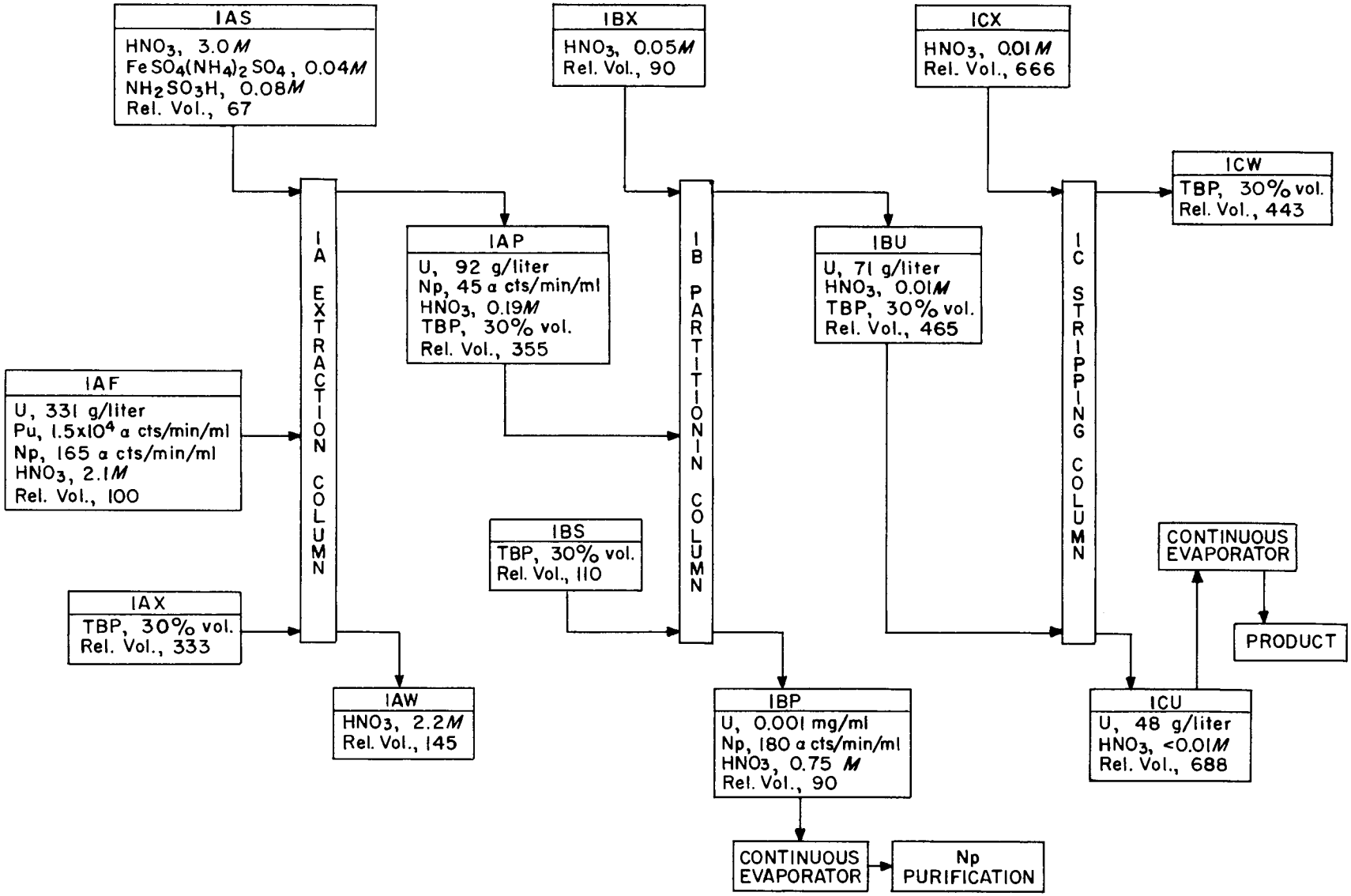

Fig. 3.1. MODIFIED PUREX FLOWSHEET USED FOR RECOVERING URANIUM AND Np^{237} FROM CHALK RIVER URANYL NITRATE SOLUTION.

solution. The plutonium was converted to the relatively inextractable trivalent state by ferrous iron, which was added to the scrub solution. The chemical behavior of uranium, plutonium, and fission products under the flowsheet conditions were known from earlier studies (ORNL-1519) on Purex flowsheet development. Therefore, only the variables affecting neptunium recovery were studied during the program. The effect of some variables which were considered important for neptunium extraction are discussed in Sec. 6.0. After the extraction of uranium and neptunium from the feed solution, the solvent containing these products cascaded to a second column in which the neptunium was separated from the uranium. Uranium and neptunium losses from the extraction column were 0.001 and less than 1.0 per cent, respectively.

Separation of Uranium and Neptunium. Neptunium was separated from uranium by adjusting chemical conditions in the partitioning column to cause a transfer of neptunium from the organic to the aqueous phase. This step was similar to the uranium-plutonium separation step in the Purex process; however, the use of a reductant is not required to separate uranium from neptunium.

The organic effluent stream from the extraction column containing the uranium and neptunium cascaded to the middle of a second pulsed column. This column, consisting of an upper 16-ft neptunium partitioning section and a lower 16-ft uranium scrubbing section, was operated at a total volume velocity of 425 gal/hr/ft^2. The neptunium partitioning solution, 0.01 M HNO_3, entered near the top of the column. A solvent scrub solution (30% TBP—70% Amsco 125-82) was pumped to the bottom of the column to remove uranium from the aqueous neptunium-bearing phase before it left the column. The aqueous neptunium stream leaving the partitioning column flowed into an evaporator for concentration and acid recovery.

Neptunium was separated from the uranium by maintaining the concentration of nitric acid in the aqueous phase leaving the column at ~ 0.75 M. Under this condition less than 1 per cent of the neptunium remained with the uranium. The uranium loss to the neptunium stream was less than 0.001 per cent at equilibrium and is considered satisfactory since the uranium can be recovered during neptunium isolation.

The effect of nitric acid concentration on neptunium separation in the partitioning column is discussed in Sec. 6.4.

Uranium Stripping. The organic stream from the partitioning column containing the uranium flowed to a third column in which the uranium was removed from the organic with 0.01 M HNO_3 solution. The aqueous solution containing the uranium from the stripping column flowed to an evaporator for concentration.

3.3 Product Handling

Uranium. The dilute uranium product solution from the stripping column was evaporated continuously to a uranium concentration of 400 g/liter. The concentrate from the evaporator was transferred to 55-gal drums and was sent to the Y-12 plant for subsequent handling.

Neptunium. The neptunium product stream from the partitioning column flowed to an evaporator and was concentrated by a factor of greater than 300. Approximately 28 gal of product solution was removed from the evaporator at the end of the program and was transferred to the ORNL Chemistry Division for further purification.

3.4 Waste Handling

Solvent Recovery. The spent solvent from the solvent extraction cycle was recovered continuously and recycled to the process. The solvent was scrubbed with a 0.2 M Na_2CO_3 solution in an 8-in.-dia pulsed column and was washed with 0.05 M HNO_3 in an unpacked column.

Extraction Column Waste. The aqueous waste solution from the extraction column, containing plutonium and fission products, was neutralized with sodium hydroxide solution and transferred to the ORNL tank farm.

4.0 SOLVENT EXTRACTION LOSSES AND MATERIAL BALANCES

4.1 Solvent Extraction Losses

Equilibrium Losses. The uranium and neptunium losses resulting from one cycle of solvent extraction were:

	Losses, % of that in feed	
Stream	Uranium	Neptunium
IAW	< 0.001	< 1.0
IBP	< 0.001	---
ICW	0.04	---
ICU	---	1.0

These losses are based on analyses of flowing stream samples taken at 6- to 8-hr intervals during the equilibrium portion of the run, using the flowsheet described in Sec. 3.0.

Composite Losses. The composite losses are based on analyses of samples that were taken from inventory tanks in which all process waste streams were collected. These losses include nonequilibrium losses resulting from various flowsheet adjustments made during the program:

	Losses, % of that in feed	
Stream	Uranium	Neptunium
IAW	0.03	6.6
IBP	0.05	---
ICW	0.14	---
ICU	---	3.9
Total	0.22	10.5

4.2 Material Balance

The third shipment of Chalk River uranyl nitrate solution contained a total of 7485.5 kg of uranium and 4.6 g of neptunium, from which 7334 kg of uranium and 3.5 g of neptunium were recovered as product. Process losses of uranium and neptunium in waste solution amounted to 14.1 kg and 0.48 g, respectively. The overall material balances for uranium and neptunium recovery were 98.6 and 87 per cent, respectively. Uranium and neptunium recoveries based on total solvent extraction losses were 99.8 and 89 per cent, respectively.

5.0 DECONTAMINATION AND PRODUCT PURITY

5.1 Uranium Decontamination

The gross gamma decontamination factor obtained for uranium by solvent extraction was about 10. This decontamination factor was sufficient to yield a product that was within the fission product specification for recovered uranium. Plutonium was decontaminated from the uranium by a factor of 2×10^3.

5.2 Uranium Purity

The uranium product solution contained approximately 400 g of uranium per liter and met fission product and plutonium specifications for recovered uranium. The total metallic ion impurities of the uranium product were less than 90 ppm based on uranium.

5.3 Neptunium Product Purity

The 3.6 g of neptunium product was contained in 28 gal of evaporator concentrate which resulted from the evaporation of about 6000 gal of IBP solution. The neptunium product solution contained less than 0.05 per cent of the uranium processed during the program. Other major metallic ion impurities included iron, nickel, and chromium, which resulted from evaporator corrosion. The chemical composition of the product solution was:

Constituent	Concentration	Constituent	Concentration
Np	32.9 mg/liter	Cr	9.6 g/liter
Gross α	1.2×10^5 c/m/ml	Ni	1.2 g/liter
Np α	2.6×10^4 c/m/ml	Ca	80 ppm
U	36.0 g/liter	Mo	352 ppm
HNO_3	5.5 M	Mn	380 ppm
Fe	37.1 g/liter		

6.0 NEPTUNIUM FLOWSHEET DEVELOPMENT

The objective of the flowsheet development phase of this program was aimed at the development of Purex process modifications required to permit neptunium recovery during fuel processing for plutonium and uranium recovery and decontamination. The basic Purex flowsheet used in recovering neptunium from the uranyl nitrate solution was discussed in Sec. 3.0; since this flowsheet has been used successfully for processing irradiated uranium, only variables affecting neptunium recovery were studied.

6.1 Effect of Nitric Acid Concentration in the Extraction Column on Neptunium Extraction

Prior to this program, experimental work had been conducted on similar feed materials to determine the effect of acid concentration on neptunium extraction. Results indicated that more than 95 per cent of the neptunium was extracted by 30 per cent tributyl phosphate solvent if the acid concentration in the extraction column was maintained above 2.0 M. Decreasing the nitric acid concentration in the column to 1.5 M caused a neptunium loss of 40 per cent to the aqueous waste. These extraction runs were made with a uranium solvent saturation of 60-65 per cent. Based on the above results, a Purex flowsheet was selected which would maintain an acid concentration of 2.0 M in the extraction column.

During this program the acid concentration in the extraction column was held constant so that other variables affecting neptunium extraction could be determined. The average daily acid concentration of the aqueous raffinate stream (IAW) from the extraction column is shown in Fig. 6.1.

6.2 Effect of the Degree of Solvent Saturation with Uranium on Neptunium Extraction

Increasing the uranium saturation of the solvent from 60 to 75 per cent did not affect neptunium extraction; the loss of neptunium to the aqueous raffinate (IAW) was less than 1 per cent in each case.

Procedure and Results. Neptunium had been recovered previously (ORNL-2335) from similar feed solutions by maintaining the uranium saturation of the solvent at 60 per cent. Therefore the initial solvent extraction conditions for the run were set for a 60 per cent uranium solvent saturation. With this condition the loss of neptunium to the aqueous waste (IAW) was less than 1 per cent. After about 48 hr (Fig. 6.1) of operation the uranium solvent saturation was gradually increased to 75 per cent and was maintained at this degree of saturation for 16 days without increasing the loss of neptunium to the waste stream.

6.3 Effect of Reductant, Fe(II) in Scrub Solution on Neptunium Extraction

In the Purex uranium second-cycle flowsheet a reductant is used in the extraction step to convert plutonium to the less extractable Pu(III) valence state. The results from one experiment conducted during this program indicate

[redacted]

ORNL-LR-DWG 22389

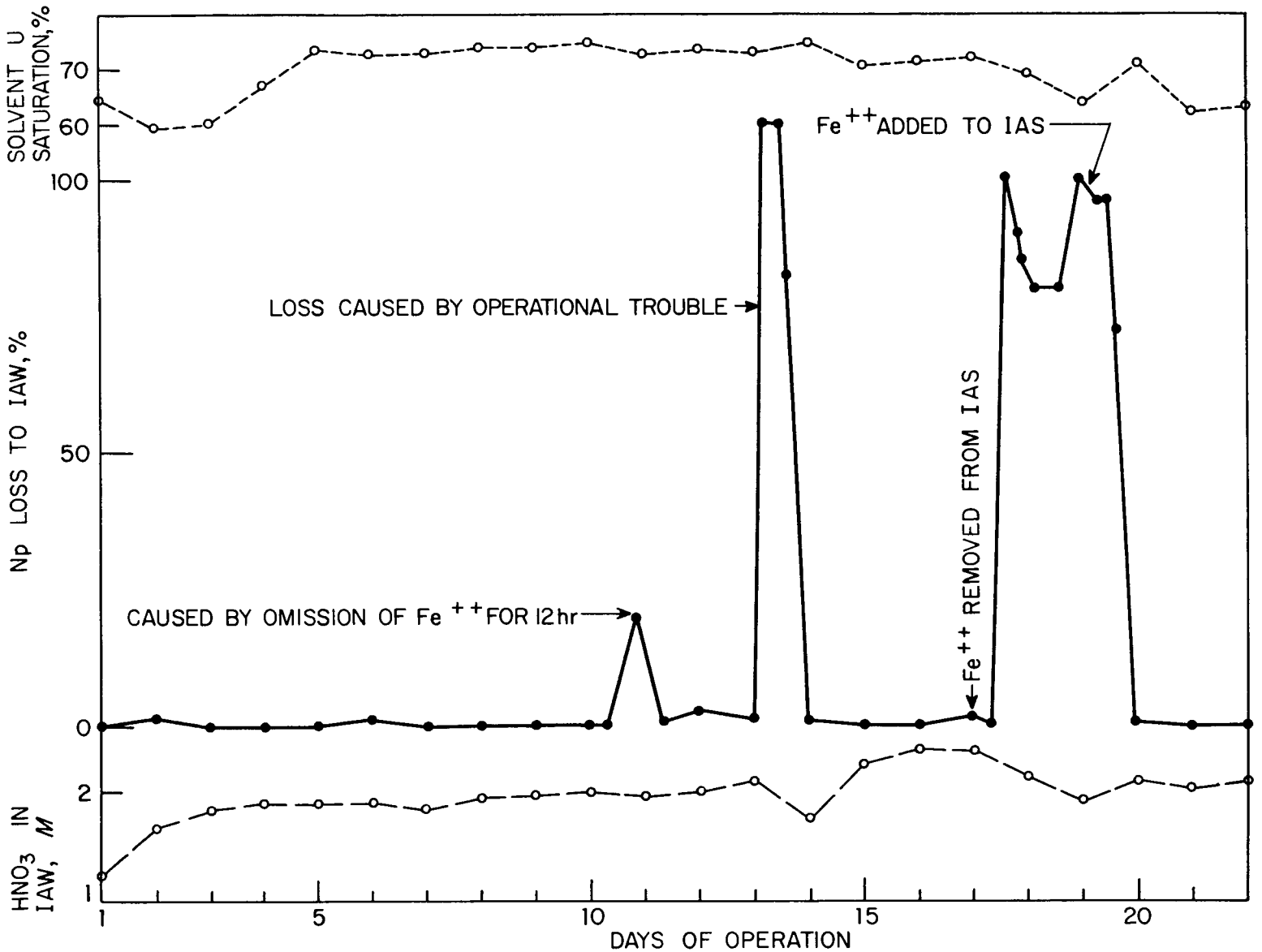

Fig. 6.1. Effect of Process Variables on Neptunium Extraction.

that a reductant is required to promote the extraction of neptunium. The loss of neptunium from the extraction column was less than 1 per cent when a reductant was used; however, when the reductant was removed, the neptunium loss increased to over 80 per cent.

Procedure and Results. The reductant (0.05 M Fe^{++}) was added to the extraction column scrub solution at the beginning of column operation. From Fig. 6.1 it may be seen that the neptunium loss to the aqueous raffinate was less than 1 per cent during the first 10 days of operation; however, on the eleventh day of operation the reductant was removed from the extraction column for about 12 hr for equipment repair, and during this period the neptunium loss in the extraction column increased to 20 per cent. Consequently, an experiment was conducted to confirm that a reductant is required to promote neptunium extraction. At the beginning of the eighteenth day of operation the reductant was removed from the extraction column, and within 48 hr the neptunium extraction loss increased from less than 1 to over 80 per cent. Reductant solution was again added to the extraction column on the twentieth day of operation and within 16 hr the neptunium extraction loss decreased to less than 1 per cent.

During this experiment the uranium saturation of the solvent and acid concentration in the extraction column were held constant and only one concentration of reductant (0.05 M Fe^{++} in scrub solution) was used.

6.4 Effect of Nitric Acid Concentration on Uranium-Neptunium Separation

Neptunium was successfully separated from uranium with 0.01 M HNO_3 solution in the partitioning column (IB) by maintaining the acid concentration of the aqueous stream (IBP) at approximately 0.75 M. A uranium separation factor of 3×10^6 was demonstrated across the partitioning column at equilibrium conditions, and the loss of neptunium to the uranium product was less than 1 per cent. Solvent extraction conditions were also demonstrated for the co-extraction of uranium and neptunium. The neptunium followed the uranium when the acid concentration of the IBP was maintained above 1.4 M. These results indicate that the path of neptunium in the uranium-plutonium partitioning column can be controlled to cause the neptunium to follow either the plutonium or the uranium product streams.

Procedure and Results. The organic effluent containing the uranium and neptunium cascaded from the extraction column (IA) to the partitioning column (IB) in which uranium was separated from neptunium. This separation was made under conditions similar to those for plutonium-uranium separation except that a reductant was not required and the concentration of acid in the aqueous stream (IBP) from the column was controlled at approximately 0.8 M HNO_3 by adjusting the flow rate of the partitioning solution.

The daily variations of nitric acid and neptunium concentrations of the aqueous stream (IBP) from the partitioning column during column operation are shown in Fig. 6.2. It may be seen that the concentration of acid in the IBP stream for the first 4 days of operation averaged 1.1 M, and with these conditions less than 10 per cent of the neptunium was recovered in the IBP stream.

[redacted]

ORNL-LR-DWG 22390

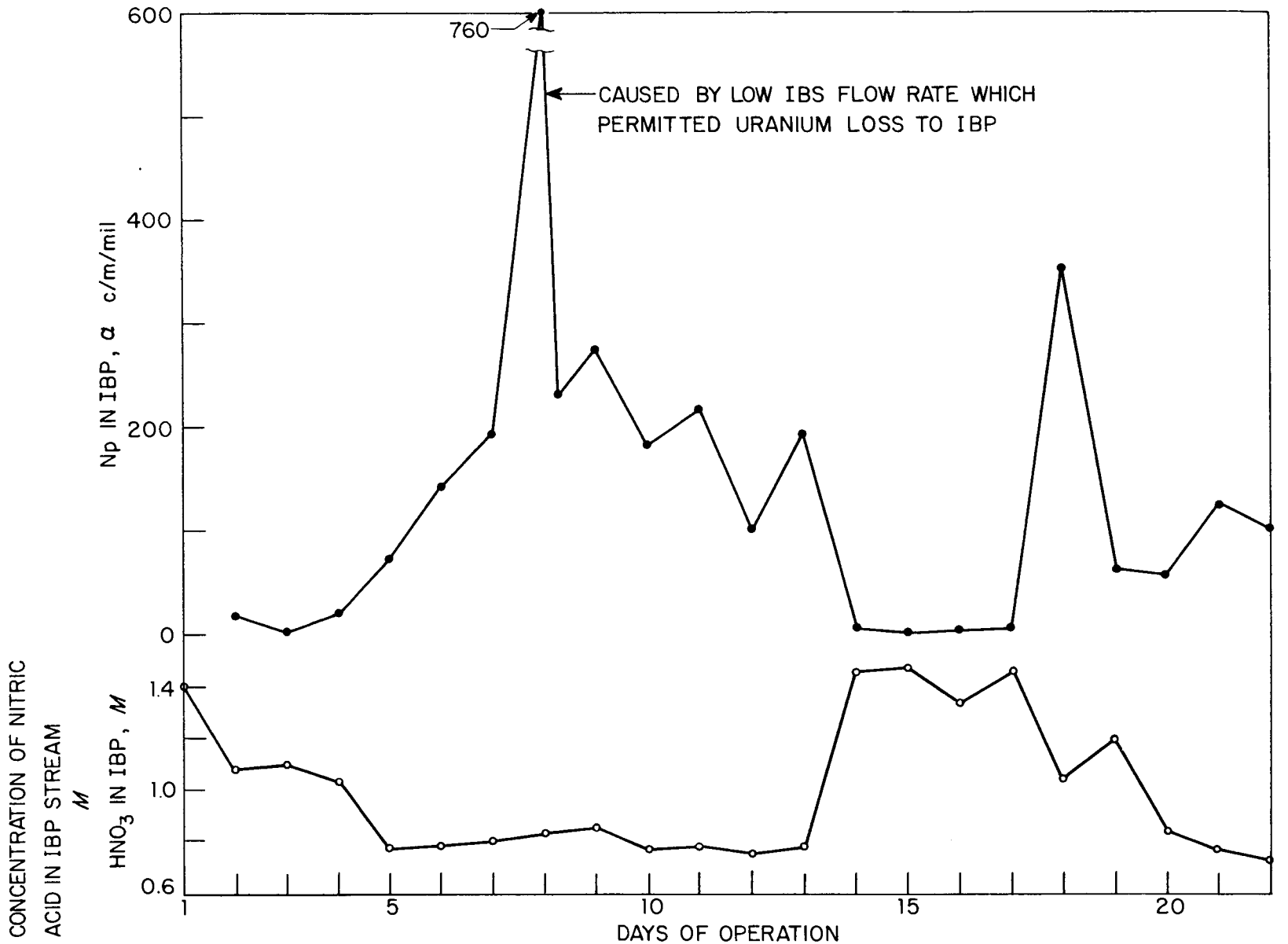

Fig. 6.2. Effects of Process Variables on Neptunium-Uranium Partitioning.

Analysis of the uranium product recovered during this period of operation indicated that only 10 per cent of the neptunium followed the uranium. Evidently most of neptunium was being refluxed in the partitioning column. On the fifth day of operation the acid concentration of the IBP was lowered to 0.8 M and was maintained near this concentration for 10 days. During this period neptunium was successfully separated from the uranium, and a uranium separation factor of 3×10^6 was demonstrated across the partitioning column with 16 ft of pulsed column scrub height. The uranium product collected during this period of operation contained less than 1 per cent of the neptunium associated with the feed.

The acid concentration of the IBP was increased to 1.4 M on the fourteenth day of column operation (Fig. 6.2) to determine if the neptunium would remain with the uranium. This change was made by decreasing the flow rate and increasing the nitric acid concentration of the partitioning solution (IBX) from 0.01 M to 0.5 M. It may be seen that the neptunium concentration in the IBP stream decreased from about 200 α c/m/ml to less than 5 α c/m/ml during the period when the acid concentration was 1.3 to 1.4 M. The uranium product collected during this period contained about 90 per cent of the neptunium associated with the feed material.

The results of this experiment indicate that neptunium can be forced with the uranium during the plutonium separation step, thereby making possible a uranium-neptunium separation during the uranium second cycle.

6.5 Effect of Sodium Nitrite in Scrub Solution on Neptunium Extraction

After the recovery of neptunium from the AECL uranyl nitrate solution was completed, a 67-hr column run was made to determine the variations in the ORNL Purex first-cycle flowsheet required for the simultaneous extraction of uranium, plutonium, and neptunium. The results indicated that sodium nitrite is required to promote the extraction of neptunium with uranium and plutonium. The omission of sodium nitrite in the extraction column scrub solution caused the neptunium loss to the IAW stream to increase from less than 1 per cent to 100 per cent.

Feed Preparation. Feed solution was prepared by recycling a portion of the uranium and neptunium product solutions. Nitric acid and water were added to provide the proper concentration of acid and uranium. The chemical composition and the valence distribution of neptunium in the feed solution were:

U	317 mg/ml	Np(IV)	24 per cent
HNO_3	2.1 M	Np(V)	52 per cent
Np	230 α c/m/ml	Np(VI)	24 per cent

[redacted]

ORNL-LR-DWG 22391

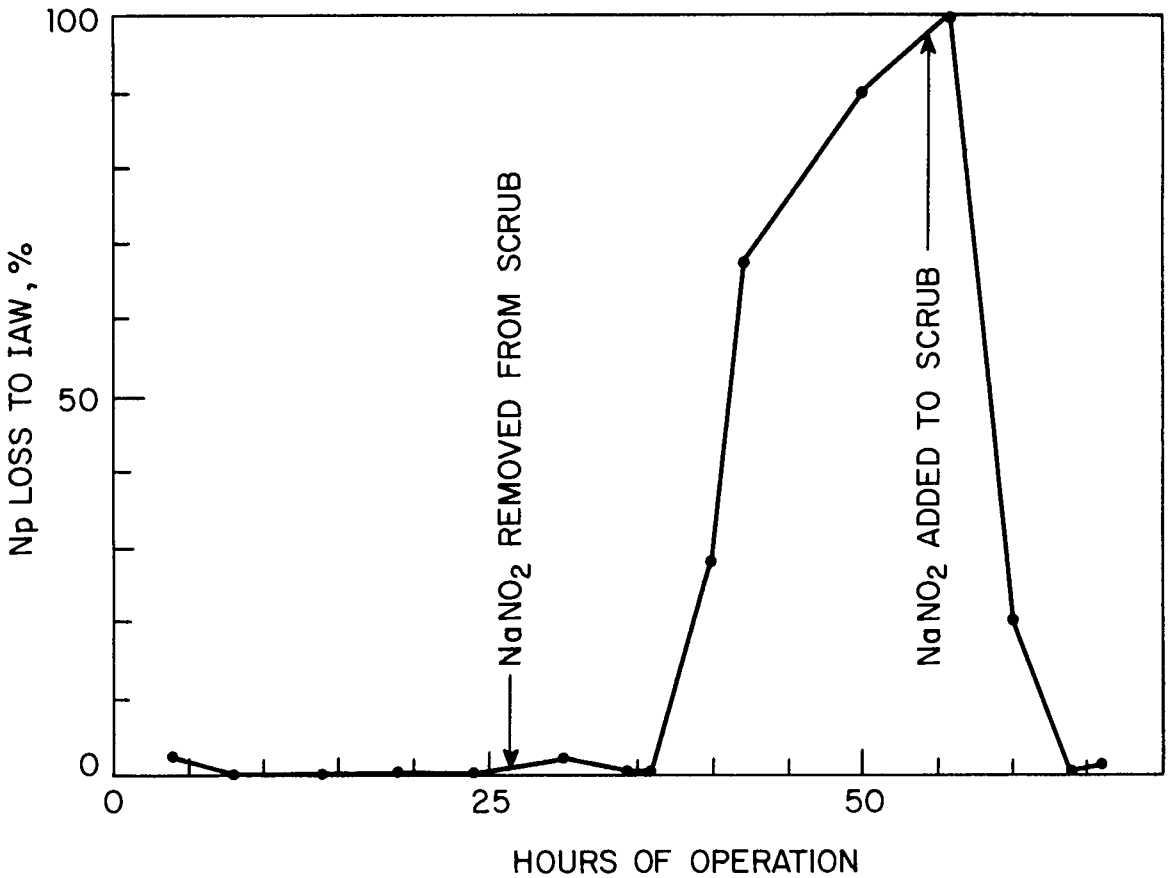

Fig. 6.3. Effect of Sodium Nitrite on Np Extraction.

Solvent Extraction. The objective of the solvent extraction demonstration was to determine the feasibility of extracting neptunium with uranium and plutonium under ORNL Purex (ORNL-1519) first-cycle extraction conditions. Since the use of sodium nitrite as an oxidizing agent for plutonium in the first-cycle feed preparation step seems to be optional with various production plants, it was decided to determine the effect of this oxidant on neptunium extraction. During the run the extraction column was operated under the following flowsheet conditions:

Feed,	100 vol:	317 g U/liter, 2.1 M HNO_3
Scrub,	67 vol:	3.0 M HNO_3, 0.05 M $NaNO_2$
Extractant,	333 vol:	30% TBP in Amsco diluent

Under these flowsheet conditions, more than 99 per cent of the neptunium was extracted with the uranium during the first 26 hr of operation (Fig. 6.3). Sodium nitrite was removed from the scrub solution after 26 hr of operation and it can be seen that the percentage loss of neptunium to the aqueous raffinate stream (IAW) did not increase appreciably until after 10 hr (or 3 column volume change) had elapsed. However, within 24 hr after removal of the sodium nitrite the loss of neptunium to the IAW had increased to 100 per cent. The addition of sodium nitrite to the scrub re-established neptunium extraction, and within 10 hr after the addition of nitrite the loss of neptunium to the IAW stream decreased to less than 1 per cent.

A gross loss of neptunium to the IAW stream without nitrite in the scrub was unexpected since the valence state analysis of the feed indicated that only 52 per cent of the less extractable Np(V) was present in the feed. This observed quantitative neptunium loss to the IAW stream could have been misleading since neptunium refluxing in the column could have contributed to the loss before equilibrium was established without nitrite. It is also possible that a valence shift takes place in the extraction column which causes Np(IV) to change to the less extractable Np(V). Further study is needed to confirm either of these assumptions.

7.0 PROPOSED PUREX CHEMICAL FLOWSHEET FOR THE RECOVERY AND DECONTAMINATION OF URANIUM, PLUTONIUM, AND NEPTUNIUM FROM IRRADIATED URANIUM

Based on the development work done in this and other similar programs, a modified Purex chemical flowsheet (Fig. 7.1) is proposed for recovering neptunium along with uranium and plutonium during fuel processing. The following modifications to the ORNL Purex flowsheet are required:

a. Addition of sodium nitrite to first cycle extraction column

b. Increase in the concentration of nitric acid in the uranium-plutonium partitioning contactor from 1.2 M to 1.4 M

c. Addition of a uranium-neptunium partitioning contactor in the uranium second solvent extraction cycle.

The use of sodium nitrite in the first-cycle extraction column should not affect the recovery or decontamination of uranium and plutonium. In fact, studies conducted at ORNL during Purex process development indicated that the addition of sodium nitrite increased ruthenium decontamination slightly but not significantly. Currently, some of the Purex-type plants in operation are using sodium nitrite in the feed adjustment step.

Increasing the concentration of nitric acid in the uranium-plutonium partitioning contactor will not appreciably affect the plutonium separation. Plutonium has been successfully separated from uranium with acid concentrations up to 2.0 M in the ORNL Metal Recovery Plant.

The addition of a uranium-neptunium partitioning contactor in the uranium second cycle is the only major flowsheet change required. The absence of plutonium and fission products in the uranium at this point should minimize the problems associated with the installation of additional contactors in existing Purex plants.

An interesting feature of the proposed flowsheet is that the performance can be determined in existing Purex plants without equipment changes up to the final uranium-neptunium separation step, and it is recommended that this be done before installing an additional contactor. The use of this flowsheet also provides a neptunium product solution free of fission products and plutonium, and therefore should simplify the final purification step.

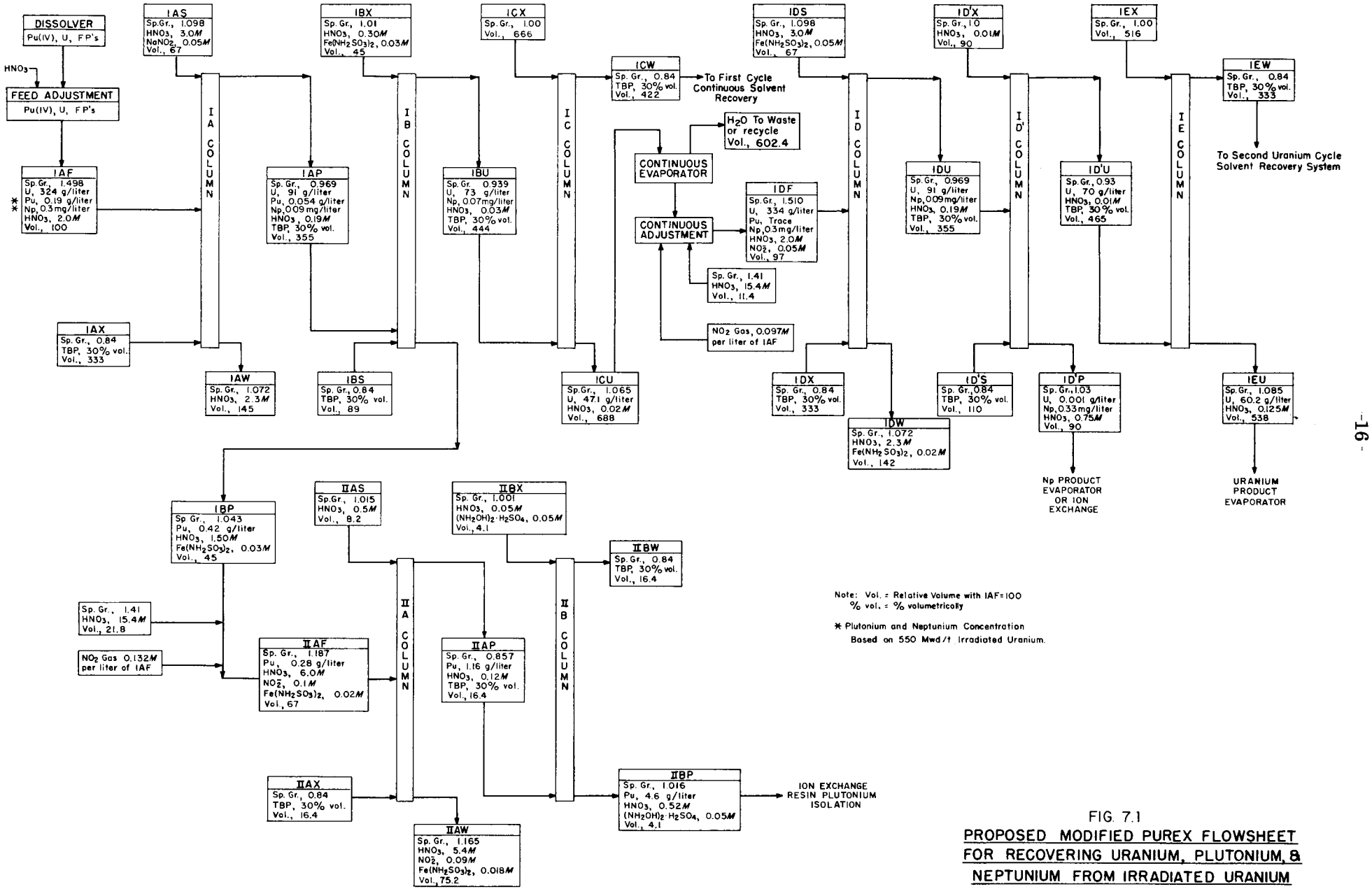

Note: Vol. = Relative Volume with IAF=100
% vol. = % volumetrically

* Plutonium and Neptunium Concentration Based on 550 Mwd/t Irradiated Uranium.

FIG. 7.1
PROPOSED MODIFIED PUREX FLOWSHEET FOR RECOVERING URANIUM, PLUTONIUM, & NEPTUNIUM FROM IRRADIATED URANIUM