UNCLASSIFIED

CENTRAL RESEARCH LIBRARY
DOCUMENT COLLECTION

MARTIN MARIETTA ENERGY SYSTEMS LIBRARIES
3 4456 0350496 4

ORNL-2332
Criticality Studies c.4

A CRITICALITY STUDY OF THE THOREX PILOT PLANT

O. O. Yarbro

CENTRAL RESEARCH LIBRARY
DOCUMENT COLLECTION
LIBRARY LOAN COPY
DO NOT TRANSFER TO ANOTHER PERSON
If you wish someone else to see this document, send in name with document and the library will arrange a loan.

OAK RIDGE NATIONAL LABORATORY
OPERATED BY
UNION CARBIDE NUCLEAR COMPANY
A Division of Union Carbide and Carbon Corporation
UCC
POST OFFICE BOX X • OAK RIDGE, TENNESSEE

UNCLASSIFIED

Printed in USA. Price 25 cents. Available from the

Office of Technical Services
U. S. Department of Commerce
Washington 25, D. C.

LEGAL NOTICE

This report was prepared as an account of Government sponsored work. Neither the United States, nor the Commission, nor any person acting on behalf of the Commission:

A. Makes any warranty or representation, express or implied, with respect to the accuracy, completeness, or usefulness of the information contained in this report, or that the use of any information, apparatus, method, or process disclosed in this report may not infringe privately owned rights; or

B. Assumes any liabilities with respect to the use of, or for damages resulting from the use of any information, apparatus, method, or process disclosed in this report.

As used in the above, "person acting on behalf of the Commission" includes any employee or contractor of the Commission to the extent that such employee or contractor prepares, handles or distributes, or provides access to, any information pursuant to his employment or contract with the Commission.

UNCLASSIFIED

Report Number ORNL-2332

Contract No. W-7405-eng-26

CHEMICAL TECHNOLOGY DIVISION

Pilot Plant Section

A CRITICALITY STUDY OF THE THOREX PILOT PLANT

O. O. Yarbro

DATE ISSUED:

AUG 28 1957

OAK RIDGE NATIONAL LABORATORY
Operated by
UNION CARBIDE NUCLEAR COMPANY
A Division of
UNION CARBIDE AND CARBON CORPORATION
Post Office Box X
Oak Ridge, Tennessee

UNCLASSIFIED

MARTIN MARIETTA ENERGY SYSTEMS LIBRARIES

3 4456 0350496 4

INTERNAL DISTRIBUTION

1. C. E. Center
2. Biology Library
3. Health Physics Library
4-5. Central Research Library
6. Reactor Experimental Engineering Library
7-26. Laboratory Records Department
27. Laboratory Records, ORNL R.C.
28. A. M. Weinberg
29. L. B. Emlet (K-25)
30. J. P. Murray (Y-12)
31. J. A. Swartout
32. E. H. Taylor
33. E. D. Shipley
34-35. F. L. Culler
36. M. L. Nelson
37. W. H. Jordan
38. C. P. Keim
39. J. H. Frye, Jr.
40. S. C. Lind
41. A. H. Snell
42. A. Hollaender
43. M. T. Kelley
44. K. Z. Morgan
45. T. A. Lincoln
46. R. S. Livingston
47. A. S. Householder
48. C. S. Harrill
49. C. E. Winters
50. D. W. Cardwell
51. D. Phillips
52. W. K. Eister
53. F. R. Bruce
54. D. E. Ferguson
55. R. B. Lindauer
56. H. E. Goeller
57. R. A. Charpie
58. J. A. Lane
59. M. J. Skinner
60. R. E. Blanco
61. G. E. Boyd
62. W. E. Unger
63. R. R. Dickison
64. A. T. Gresky
65. E. D. Arnold
66. C. E. Guthrie
67. J. W. Ullmann
68. K. B. Brown
69. K. O. Johnsson
70. H. M. McLeod
71. C. W. Hancher
72. J. C. Bresee
73. B. F. Bottenfield
74. A. D. Callihan
75. C. V. Ellison
76. W. H. Lewis
77. W. T. McCarley
78. W. T. McDuffee
79. R. J. McNamee
80. J. R. Parrott
81. R. H. Rainey
82. G. S. Sadowski
83. E. M. Shank
84. R. H. Vaughan
85. W. R. Winsbro
86. O. O. Yarbro
87. W. W. Weinrich (consultant)
88. M. D. Peterson (consultant)
89. D. L. Katz (consultant)
90. G. T. Seaborg (consultant)
91. M. Benedict (consultant)
92. C. E. Larson (consultant)
93. L. Squires (consultant)
94. J. H. Rushton (consultant)
95. ORNL - Y-12 Technical Library, Document Reference Section

EXTERNAL DISTRIBUTION

96. R. F. Bacher, California Institute of Technology
97. Division of Research and Development, AEC, ORO
98-629. Given distribution as shown in TID-4500 (13th ed.) under Criticality Studies category (100 copies - OTS)

CONTENTS

		Page
1.0	Abstract	1
2.0	Introduction	1
3.0	Critical Concentrations of U-233 in Thorex Process Equipment	2
	3.1 Large Process Tanks	2
	3.2 Thorium Product Evaporators	5
	3.3 Pulse Columns	5
	3.4 Surge Tanks and Standpipes	5
	3.5 Uranium Isolation and Third Cycle Equipment	6
4.0	Suggested Operating Procedures to Ensure Safety from Criticality Incidents	6
	4.1 Large Process Tanks	6
	4.2 Thorium Product Evaporators	10
	4.3 Pulse Columns	10
	4.4 Surge Tanks	11
	4.5 Uranium Isolation System	12
	4.6 Third Uranium Cycle and Uranium Storage	12
5.0	Appendix	13
	5.1 Development of Model	13
	5.2 Results	16
	5.3 Thorex Equipment Flowsheets	16

1.0 ABSTRACT

A recent criticality study has indicated that the Thorex Pilot Plant is critically safe for the processing of thorium irradiated to less than 10,000 grams of U-233 per ton. As the size of equipment exceeds the geometrically safe size and the total uranium inventory exceeds the minimum critical mass, minor equipment modifications and changes in operational procedures were necessary to provide safety under adverse operating conditions.

2.0 INTRODUCTION

The objectives of this criticality study were to determine the limiting U-233 concentration in each piece of process equipment in the Thorex Pilot Plant, to suggest operating procedures that would ensure that these limits not be exceeded, and to determine what equipment modifications were required to safeguard against criticality. The change to a co-decontamination flowsheet (Figs. 5.2-5.10) by the Thorex Pilot Plant made the study necessary. Plant modifications increased the size of some equipment, and the chemistry of the co-decontamination flowsheet increased the maximum possible uranium concentration in some of the process streams. The U-233 concentration in the feed solution will also be increased when longer-irradiated thorium slugs are processed.

The results presented in this report are based on calculations in which the product of the resonance absorption and the fast fission effect was assumed to be unity. A comparison of calculated results with experimental data indicates that the calculated results are conservative in the range of U-233 concentrations dealt with in this report. An irradiation level of 10,000 g of U-233 per ton of thorium* was chosen as a basis for evaluation, as this is a factor of 2 greater than any irradiation expected in the present program. The choice of this value does not preclude the processing of more highly irradiated material in the Thorex or similar plants, but the present criticality study should be extended before the more highly irradiated material is processed.

---

*The abbreviation "g/t" is used throughout this report to mean "grams of U-233 per ton of thorium."

Critical safety was designed into the equipment of the uranium isolation system, the third uranium cycle, and the uranium storage facility by limiting the size and capacity of the equipment. There are, however, connections between these systems and the large process equipment which present potential hazards. To eliminate these hazards, a lock-out system was provided on the exit streams from all geometrically safe equipment to impede the transfer of concentrated uranium solution to nongeometrically safe equipment.

The limiting concentrations in the other process equipment cannot be reached except by the direct addition of uranium to the equipment. The uranium concentration in the pulse columns could build up to 18 g/liter if the column was operated with a reduced strip rate for 12 to 24 hr. This concentration would be reduced to a safe level by dilution when the solutions were forced out into larger equipment. This uranium buildup should be prevented by periodic checks on flow rates.

A thorough criticality study should be included in plans for modifications of the existing plant or the design of other installations.

3.0 CRITICAL CONCENTRATIONS OF U-233 IN THOREX PROCESS EQUIPMENT

3.1 Large Process Tanks

The uranium* concentration in the large process tanks (Table 3.1) should be limited to 10 g/liter to ensure safety from a criticality incident. This concentration is limiting for uranium in both aqueous and organic (43.5% TBP in Amsco) solutions, as the hydrogen concentration is approximately the same for both. The allowable uranium concentration would be increased slightly by the presence of compounds other than uranyl nitrate in the solution or for smaller diameter tanks. These effects were neglected in establishing the limiting concentrations, since the composition of solution in the process tanks is often unknown and solution may be transferred from one tank to another of different diameters.

---

*This study deals entirely with the processing of U-233; therefore, all reference to uranium should be taken to mean U-233.

Table 3.1. Diameter and Normal Solution Concentration for Large Thorex Process Tanks

Tank	Tank Diameter, in.	Type of Solution	Normal Operating Concentrations				
			Th, g/liter	U-233[a], g/liter	Al, M	H^+, N[b]	Others
Dissolver, S-1	54	Aqueous	230	2.5	0.4	6	
Feed adjustment, S-2	48	Aqueous	350	3.84[c]	0.6	-0.4	
1A-column feed, S-4	36	Aqueous	350	3.84	0.6	-0.4	
Recycle acid, S-5	24	Aqueous	< 0.1	< 0.1		13	
Lean acid, S-12	36	Aqueous	< 0.1	< 0.1		0.5	
1A-column waste, N-2	36	Aqueous	0.2	< 0.1	0.5	-0.4	
1A-column waste, N-5	18	Aqueous	0.2	< 0.1	0.5	-0.4	
Rework, N-7	24	Varies	Varies	Varies[d]	Varies	Varies	
Rework, N-8	24	Varies	Varies	Varies[d]	Varies	Varies	
Miscellaneous waste, N-16	24	Varies	Varies	Varies[d]	Varies	Varies	
1AW decay, N-22	60	Aqueous	0.2	Varies[e]	0.5	-0.4	
Concentrated thorium, P-3	36	Aqueous	450	< 0.1		1.6	
Concentrated thorium, P-4	36	Aqueous	450	< 0.1		1.6	
Evaporator condensate, P-6	60	Aqueous	< 0.1	< 0.1		0.03	

a. Uranium concentrations based on 10,000 g of U-233 per ton of thorium in feed.

b. Minus sign indicates acid deficiency.

c. During boildown, uranium concentration may be as high as 10 g/liter in S-2.

d. Uranium concentration may vary because recycle material from all parts of the plant may be added to these tanks.

e. This tank is used for the storage of 1AWC for protactinium decay. Thus the uranium concentration builds up with time. The maximum value would depend on the decay time of the feed material but cannot exceed 1.7 g/liter.

Table 3.1. (Cont'd)

Tank	Tank Diameter, in.	Type of Solution	Normal Operating Concentrations				
			Th, g/liter	U-233[a], g/liter	Al, M	H^+, N	Others
Thorium product storage, P-16	66	Aqueous	450	< 0.1		1.6	
Thorium product storage, P-17	66	Aqueous	450	< 0.1		1.6	
Thorium product storage, P-18	66	Aqueous	450	< 0.1		1.6	
Thorium product storage, P-20	-	Aqueous	450	< 0.1		1.6	
Thorium product storage, P-21	-	Aqueous	450	< 0.1		1.6	
Thorium product storage, P-22	-	Aqueous	450	< 0.1		1.6	
Thorium product storage, P-23	120	Aqueous	450	< 0.1		1.6	
Thorium product storage, P-24	120	Aqueous	450	< 0.1		1.6	
2A-column feed, P-51	24	Aqueous	350	3.84	0.6	0.4	
1C-column waste, P-69	42	Organic	< 0.1	< 0.1			42.5% TBP in Amsco
2A-column waste, P-70	42	Aqueous	0.3	< 0.1	0.5	0.4	
2C-column product, R-2	36	Aqueous	< 0.1	2.9		0.05	
Isolation feed, R-3	36	Aqueous	< 0.1	2.9		0.05	
Isolation waste, R-9	36	Aqueous	< 0.1	< 0.1		0.05	
Used solvent, T-4	60	Organic	< 0.1	< 0.1			42.5% TBP in Amsco
Clean solvent, T-5	54	Organic	< 0.1	< 0.1			42.5% TBP in Amsco
Waste carbonate, T-10	30	Aqueous	< 0.1	< 0.1			0.1 M $NaCO_3$

3.2 Thorium Product Evaporators

The evaporators for concentrating thorium solution include the intercycle evaporator (P-2—P-7 loop) and the product evaporator (P-62—P-67 loop). The uranium concentration in these two pieces of equipment should be limited to 10 g/liter because of the size of P-2 and P-62 and the size of the tanks to which the concentrated solution is transferred. The presence of thorium in the evaporators has been neglected in establishing the 10-g/liter limit since the evaporators could be used to concentrate solution containing little or no thorium.

3.3 Pulse Columns

The maximum allowable uranium concentration in the pulse columns is fixed by the size of the disengaging sections at the top and bottom of the columns. These large end sections limit all the columns to a uranium concentration of 15 g/liter.

3.4 Surge Tanks and Standpipes

1A-Column Accumulator. The 1A-column accumulator (N-23) is an 18-in.-dia tank, 33 in. high. The uranium concentration should be limited to 15 g/liter in a tank of this size to ensure safety from a criticality incident.

1AP Standpipe and Surge Tank. The 1AP standpipe (P-11-A) consists of a length of 2-in.-dia pipe, and is critically safe at any uranium concentration. The 1AP stream overflows from P-11-A to the 1AP surge tank (R-11), which is made up of a 15-ft section of 2-in.-dia pipe with an enlarged section 23 in. dia and 48 in. high. The uranium concentration in R-11 is limited to 10 g/liter by the enlarged section.

2AP Standpipe. The 2AP standpipe (P-11) consists of a length of 2-in.-dia pipe and is critically safe at any uranium concentration.

2BU Standpipe. The 2BU standpipe (P-59) is made up of a section of 2-in.-dia pipe with an enlarged section 10 in. dia and 10 ft long. The maximum safe uranium concentration in the enlarged section is 25 g/liter.

3.5 Uranium Isolation and Third Cycle Equipment

The uranium isolation system and the third uranium cycle were designed to be critically safe by limiting the size and capacity of the equipment. This equipment was designed to operate at uranium concentrations up to 350 g/liter, and as long as it is operated correctly, no criticality problems exist.

4.0 OPERATING PROCEDURES USED TO ENSURE SAFETY FROM CRITICALITY INCIDENTS

4.1 Large Process Tanks

The possibility of concentrating uranium solution in the large process tanks has been eliminated by disconnecting the steam supply to the jackets of all tanks that could contain uranium at a uranium-to-thorium ratio greater than 5,000 g/t. The steam recirculation jets (normally used for decontamination) have been disconnected from all tanks except two. These two tanks, a waste catch tank (N-8) and the uranium isolation feed tank (R-3), require heating for normal operation. By the use of the recirculation jets, the solution in these two tanks can be heated but not reduced in volume.

Feed Preparation System. Included in the feed preparation system are the dissolver (S-1), the feed adjustment tank (S-2), the acid fractionator (S-9), catch tanks for lean and recycle acid (S-12 and S-5), and the first and second cycle feed tanks (S-4 and P-51). The normal operating concentrations for this system are listed in Table 3.1. Based on irradiations to 10,000 g/t, the maximum uranium concentration in the feed adjustment system under normal operation is 10 g/liter in the feed adjustment tank prior to dilution. The presence of a high concentra-

tion of thorium in the feed solution provides sufficient safety in the feed adjustment step.

In adding recycle material to one of the tanks of the feed preparation system, the concentration of the solution should be less than 10 g/liter. If it is necessary to add more concentrated uranium solution to a tank, sufficient volume should be provided in the tank prior to the addition to give a final uranium concentration of less than 10 g/liter. Also, not more than 300 g of uranium should be added at a time, allowing time between additions for the previous batch to become thoroughly mixed with the solution in the tank.

If S-2 is used for reducing the volume of recycle material, the amount of uranium in S-2 should be closely controlled to prevent the uranium-to-thorium ratio from exceeding 10,000 g/t. A material balance is kept around S-2 and the uranium-to-thorium ratio has been limited to 5,000 g/t, thus allowing a safety factor to allow for incorrect sample results or errors in keeping the inventory.

1A- and 2A-Column Waste Catch Tanks. With irradiation to less than 10,000 g/t, the combined uranium and protactinium concentration in the 1A or 2A-column waste could not exceed the 10-g/liter limit. The catch tanks for A-column wastes (N-2, N-5, and P-70) therefore do not present a criticality problem. If the 1A-column waste from processing of short-decayed thorium is to be stored in the 1AW storage tank (N-22) for protactinium decay, evaporation should be controlled to prevent the combined uranium and protactinium concentrations from exceeding 10 g/liter.

Rework Tanks. The waste header from the uranium isolation system drains to one of the rework tanks (N-7). Concentrated uranium solution could get into this header from the samplers on the uranium product tank and the uranium product flowing stream, which drain to the waste header, and from the resin column, which could accidentally be eluted to the

waste tank (L-24) from which solution could be transferred to the waste header. To eliminate these potential hazards, the isolation waste header will be rerouted to the waste catch tank of the third uranium cycle, which is a geometrically safe tank. To provide safety until the waste header can be rerouted, the product samplers have been welded closed and a lock-out system has been installed on the drain valves from L-24. A high-level alarm is being depended on to prevent the overflow of L-24 until the waste header is rerouted.

Before solution is added, particularly from the isolation system, to the rework tanks, N-7, N-8 or N-16, the uranium concentration should be known to be less than 10 g/liter. If it is necessary to add more concentrated solution to the rework tanks, sufficient volume should be provided prior to the addition to give a final concentration of less than 10 g/liter. The uranium should be added in batches of less than 300 g with agitation between additions.

Thorium Product Storage Tanks. Ten tanks, ranging in diameter from 36 to 120 in., are used to store the concentrated thorium nitrate product from the Thorex process. Included in this group are P-3 and P-4, P-16 through P-18, and P-20 through P-24. No criticality problem exists as long as these tanks are used for storage of thorium product.

Uranium Product Catch Tanks. Under normal operating conditions with feed irradiated to 10,000 g/t, the uranium concentration in the uranium product catch tanks (R-2 and R-3) will not exceed 3 g/liter. If the 1C- or 2C-column is operated for long periods of time with a reduced strip solution flow rate, it is possible to build up the uranium concentration in the column to 18 g/liter. When conditions are restored to normal, this uranium would be stripped out and go to R-2. The concentration would be reduced below 10 g/liter by holdup in the enlarged section of the column and connecting lines between the 2C-column and R-2. The only possibility of exceeding the limiting concentration in R-2 or R-3 is by direct addition of uranium to these tanks.

Solvent System Catch Tanks. The solvent system catch tanks include the 2CW catch tank (P-69), the 1CW catch tank (T-4), the recovered solvent catch tank (T-5), and the waste carbonate catch tank (T-10). As discussed previously, it is possible to build up a uranium concentration of 18 g/liter in the 1C- or 2C-column and then displace this material into the 1CW or 2CW catch tanks. Sufficient dilution is provided by solution in the enlarged sections of the columns to reduce the uranium concentration below 10 g/liter. Tank T-5 catches the recovered solvent from the T-column and is essentially free from uranium. Under no conditions could it exceed 10 g/liter. The carbonate strip rate to the T-column is one-tenth of that of the organic, giving a concentration factor of 10 in the carbonate waste stream. In order to limit the uranium in T-10 to 10 g/liter, the concentration in T-4 must be below 1 g/liter. A sampling schedule has been set up for T-10 and T-4 to prevent the buildup of uranium in the solvent recovery system. If sample results show a concentration greater than 1 g/liter in T-10 or 0.1 g/liter in T-4, the solvent recovery system is shut down and the source of the uranium determined and eliminated. To prevent the accumulation of uranium in a 100-liter aqueous heel in T-4, a 1-gal/hr water purge has been installed to T-4.

Evaporator Condensate Catch Tank. The condensate catch tank for the interstage and the thorium product evaporators does not present any criticality problem, as in no process stream entering this tank can the uranium concentration of 10 g/liter be approached.

Isolation System Effluent Catch Tank. Under normal operating conditions, the uranium concentration in the isolation system effluent catch tank (R-9) cannot approach the 10-g/liter limit. Certain operational errors, however, could cause the elution of a loaded resin column to R-9. One of the resin columns would be eluted to R-9 if eluant was pumped to a loaded column and then the valving was changed for loading the column from the isolation feed tank (R-3). The eluant, containing as much as 1500 g of uranium at 250 g/liter, would be pushed out of the column to R-9. A similar situation would result from recycling solution contami-

nated with eluant from R-9 to R-3 and pumping this solution through a partially loaded column. A lock-out system has been installed on the isolation equipment that will impede the direct elution of a resin column to R-9 or the contamination of R-9 with eluant. Two locks will be used on each of the resin columns, one to lock either the valve from the eluant pump to the column or the valve from the column to R-9, and the other to lock the valve from R-3 to the resin column. During an elution, the valves from R-3 to the column and from the column to R-9 will be locked closed. For loading, the valve from the eluant pump to the column will be locked closed. The key to the lock system will be assigned to the chief of operations.

4.2 Thorium Product Evaporators

Under normal operating conditions the thorium evaporators present no criticality problem. The solution in the second-cycle thorium-product evaporator (P-62—P-67) does not contain uranium in appreciable concentrations. The intercycle evaporator (P-2—P-7) concentrates the first-cycle product solution, and the concentrate has a thorium/uranium ratio essentially the same as in the feed adjustment step. Thus, the uranium concentration will not reach the 10-g/liter limit for 10,000-g/t material.

If the evaporators are to be used for purposes other than concentrating thorium solution, such as reducing the volume of recycle material, the total mass of uranium in the system should be known and the volume maintained sufficiently large to prevent the 10-g/liter limit from being exceeded.

4.3 Pulse Columns

Under normal operating conditions the uranium concentration in the pulse columns will not approach the 15-g/liter limit. With a reduced strip solution flow rate, however, it is possible to build up the uranium concentration as high as 18 g/liter in the strip columns. Similar, but less serious conditions, could exist in the extraction and partition-

ing columns. To prevent this, flow rates to the columns should be checked regularly and any deviation from run conditions corrected. If a strip rate is found to be considerably below run conditions, it should not be increased to run conditions in one jump but in a number of small steps. The time required to build up a minimum critical mass in one of the columns is greater than 10 hr, during which time the flow rates in the column would have to be considerably below normal. The possibility of such a condition existing undetected for more than 2 or 3 hr is very small. In order to build up an 18-g/liter concentration in the columns, the uranium concentration in the enlarged end sections of the columns is less than the equilibrium concentration of 1 g/liter. When conditions are changed, causing the uranium to move into the enlarged end sections, some dilution will take place.

4.4 Surge Tanks

1A-Column Accumulator. Under normal operating conditions, the 1A-column accumulator (N-23) does not contain uranium. The only way uranium could get into N-23 would be by backing up from 1A-column as a result of a rupture in the pulse transmission line. Therefore the maximum concentration that could reach N-23 would be less than the maximum concentration that could back up from 1A-column. Since this maximum is less than the 15-g/liter limit, N-23 is safe from criticality incidents.

1AP Standpipe and Surge Tank. Because the 1AP standpipe (P-11-A) is geometrically safe, no criticality problem exists with this piece of equipment.

The equilibrium uranium concentration of the 1AP stream is 0.8 g/liter for thorium irradiated to 10,000 g/t. This is well below the limiting value of 10 g/liter. It is conceivable that the uranium concentration in the 1A-column could build up to 18 g/liter under improper operating conditions. If this uranium was then stripped into the organic phase, the holdup in the enlarged section of the 1A-column and P-11-A is large enough to dilute the 18-g/liter solution to less than the 10-g/liter limit.

2AP Standpipe.

The 2AP standpipe (P-11) is geometrically safe and does not present any criticality problem.

2BU Standpipe. The limiting uranium concentration of 25 g/liter in the 2BU standpipe (P-59) is greater than the maximum attainable uranium concentration in 2B-column; therefore no criticality problem exists.

4.5 Uranium Isolation System

The equipment in the uranium isolation system is geometrically safe, but there are connections between this system and the large process equipment which jeopardize the safety of the system. All connections between the isolation system and the larger equipment that were not necessary have been eliminated and a lock-out system (previously described) has been installed on the remaining connections to impede the transfer of concentrated uranium solution to the large equipment.

4.6 Third Uranium Cycle and Uranium Storage

The equipment of the third uranium cycle and the uranium storage facility is designed to be geometrically safe, but there are connections with the waste tank farm and a solvent recovery system which present potential hazards. A lock-out system, similar to that installed in the uranium isolation system, has been installed on all process streams that leave the third uranium cycle and the uranium storage facility. A total of six locks will be required to provide safety. The key to the lock-out system will be the responsibility of supervisors.

5.0 APPENDIX

5.1 Development of Model

To apply theoretical calculations to the equipment of the Thorex Pilot Plant, various assumptions were made. The assumptions made for these calculations were conservative for the uranium concentrations dealt with in this report.

Calculations were based on the combined slowing down and diffusion model. The general critical equation is given by

$$k = \eta f p^{th} \epsilon g^{th} p^{NL} \qquad (1)$$

where k = the reactivity, which is equal to unity for criticality

η = the number of neutrons produced per neutron absorbed in the fissionable material

f = thermal utilization, i. e., the ratio of thermal neutrons absorbed in fissionable material to the total thermal absorptions

p^{th} = the resonance escape, i. e., the probability that a neutron born from fission will be slowed to thermal energies without being absorbed

ϵ = the fast fission effect, i. e., the ratio of total fissions to thermal fissions

g^{th} = the probability that neutrons born from fission are slowed to thermal energies without escaping from the reactor

p^{NL} = the probability that thermal neutrons do not escape from the reactor

For the purpose of this study, the product of pth and ϵ was assumed to be unity. This reduces the critical equation to

$$k = \eta f p^{NL} g^{th} \tag{2}$$

$$\text{where } f = \frac{\Sigma_a^U}{\Sigma_a^U + \Sigma_a^o} \tag{3}$$

$$\text{or } f = \frac{N^U \sigma_a^U}{N^U \sigma_a^U + \Sigma_a^o} \tag{4}$$

where Σ_a^U = macroscopic absorption cross section of uranium

Σ_a^o = total macroscopic absorption cross-section of nonfissionable material in the system

N^U = atomic concentration of uranium

σ_a^U = microscopic absorption cross-section of uranium

$$\text{therefore } 1 = \eta p^{NL} g^{th} \frac{N^U \sigma_a^U}{N^U \sigma_a^U + \Sigma_a^o} \tag{5}$$

Solving for N^U gives $$N^U = \frac{\Sigma_a^o}{\sigma_a^U(\eta p^{NL} g^{th} - 1)} \tag{6}$$

The thermal nonleakage probability is given by

$$p^{NL} = \frac{1}{1 + L^2 B^2} \tag{7}$$

Where L = the diffusion length, and the buckling B^2 for a cylinder of radius R and height 2b is given by

$$B^2 = \left(\frac{J_o}{R}\right)^2 + \left(\frac{\pi}{2b}\right)^2 \tag{8}$$

where $J_o = 2.405$.

The diffusion length is given by

$$L^2 = \frac{D}{\Sigma_a} \tag{9}$$

The diffusion coefficient D is defined as

$$D = \frac{1}{3\Sigma_t + (1-\mu_o)} \tag{10}$$

where Σ_t = total cross-section

μ_o = the average scattering angle for elastic neutron scattering

The thermal diffusion coefficient is approximately constant for low fuel concentrations and for the purpose of these calculations, the experimental value of 0.142 cm was used for dilute solutions.

The fast nonleakage probability is given by

$$g^{th} = \exp\left[-B^2 \int_o^{u^{th}} \frac{D(u')du'}{\xi\,\Sigma_t(u')}\right] \tag{11}$$

Substitution of the definition of D and the average values of ξ and μ in this equation gives

$$g^{th} = \exp\left[-\frac{B^2}{3\xi(1-\mu_o)} \int_o^{u^{th}} \frac{du'}{\Sigma_t^2(u')}\right] \tag{12}$$

Solution of Eq. (12) requires numerical integration, using data from published cross sections.

5.2 Results

The results of the criticality calculations of this report are presented in Fig. 5.1 where the critical uranium concentration is plotted as a function of buckling. To use Fig. 5.1 for a specific cylindrical geometry, calculate the buckling from the equation (8) and read the critical concentration from Fig. 5.1.

Some points determined from experimental data* are also included in Fig. 5.1 which indicate the calculated values are conservative in the range of the uranium concentrations dealt with in this study.

5.3 Thorex Equipment Flowsheets

The equipment flowsheets for the Thorex Pilot Plant are shown in Figs. 5.2 through 5.10.

*J. K. Fox, L. W. Gilley, E. R. Rohrer, "Critical Mass Studies VIII. Aqueous Solutions of U-233," ORNL-2143 (August 1956).

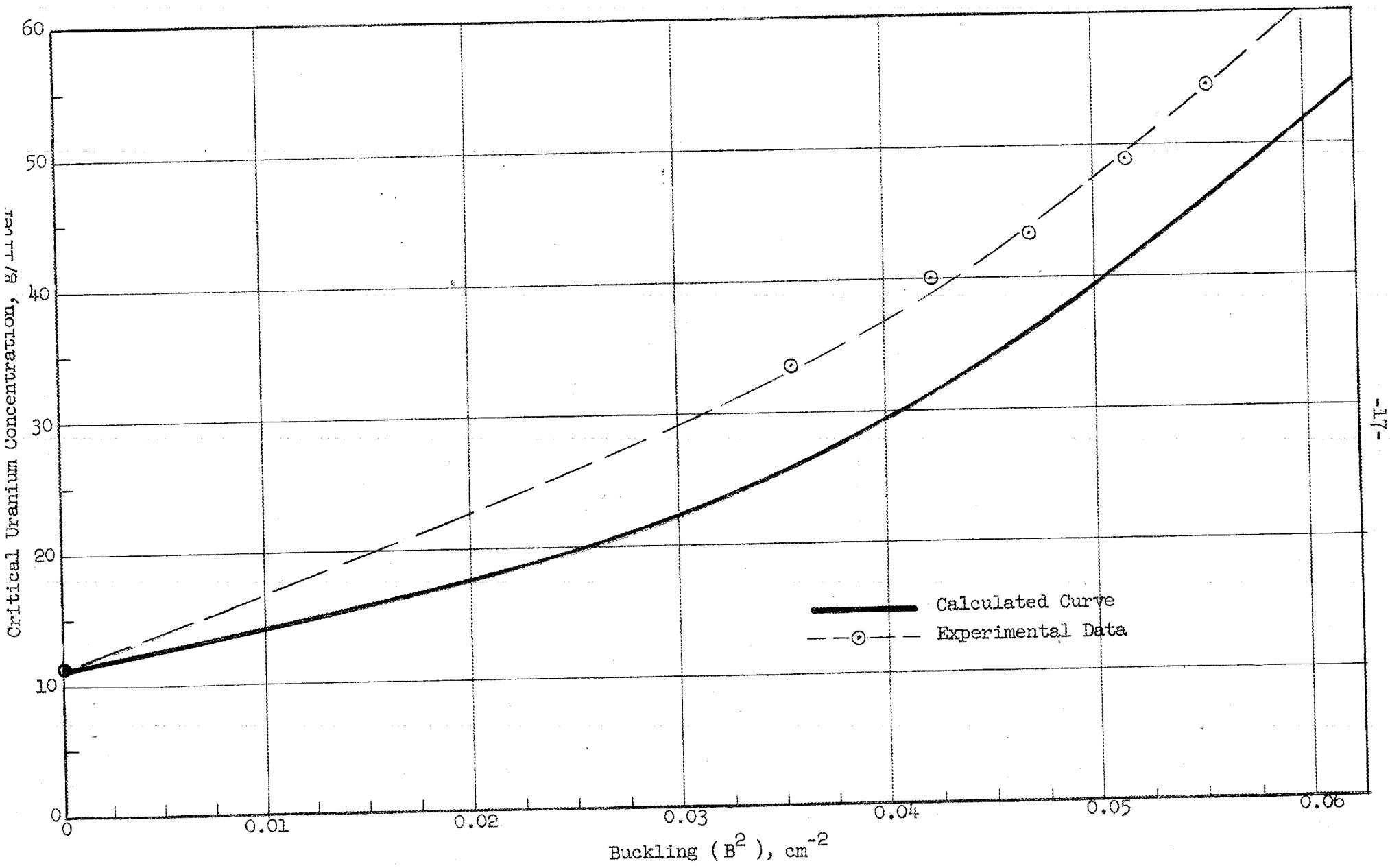

Fig. 5.1. Critical U-233 Concentration as a Function of Buckling.

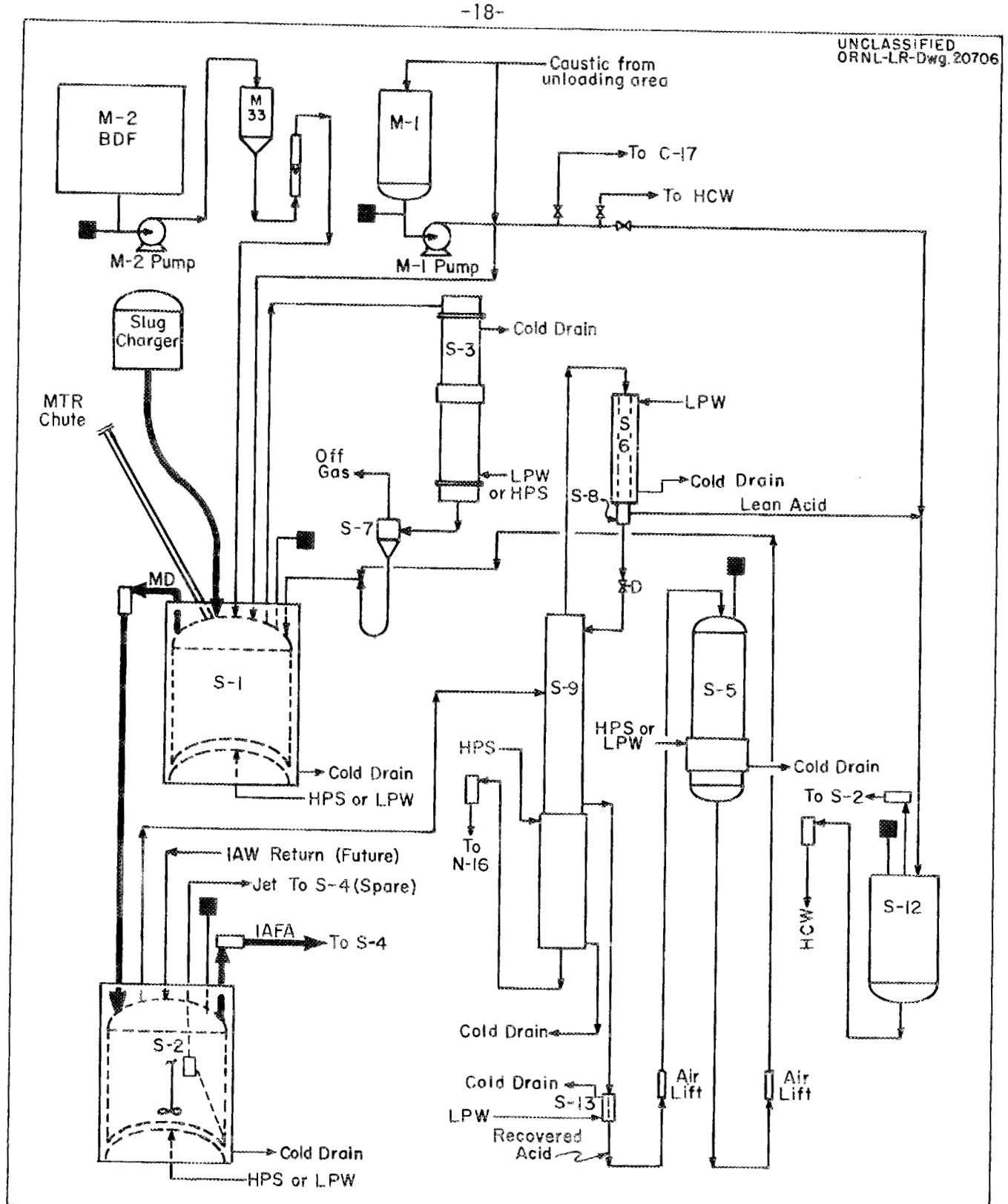

No	Service
M-1	Caustic Head Tank
M-2	Dissolver Acid Head Tank
M-33	Head Pot
S-1	Dissolver
S-2	Feed Adjustment Tank
S-3	Dissolver Condenser
S-5	Recycle Acid Catch Tank
S-6	Fractionator Condenser
S-7	Separator
S-8	Vapor-Liquid Separator
S-9	Acid Fractionator
S-12	Lean Acid Catch Tank
S-13	Acid Cooler

—LEGEND—

- Flowing Stream Sample
- Composite Sample
- Th
- U or U & Th

Fig. 5.2.
THOREX PROCESS
DISSOLUTION & FEED PREPARATION

UNCLASSIFIED
ORNL-LR-Dwg.20707

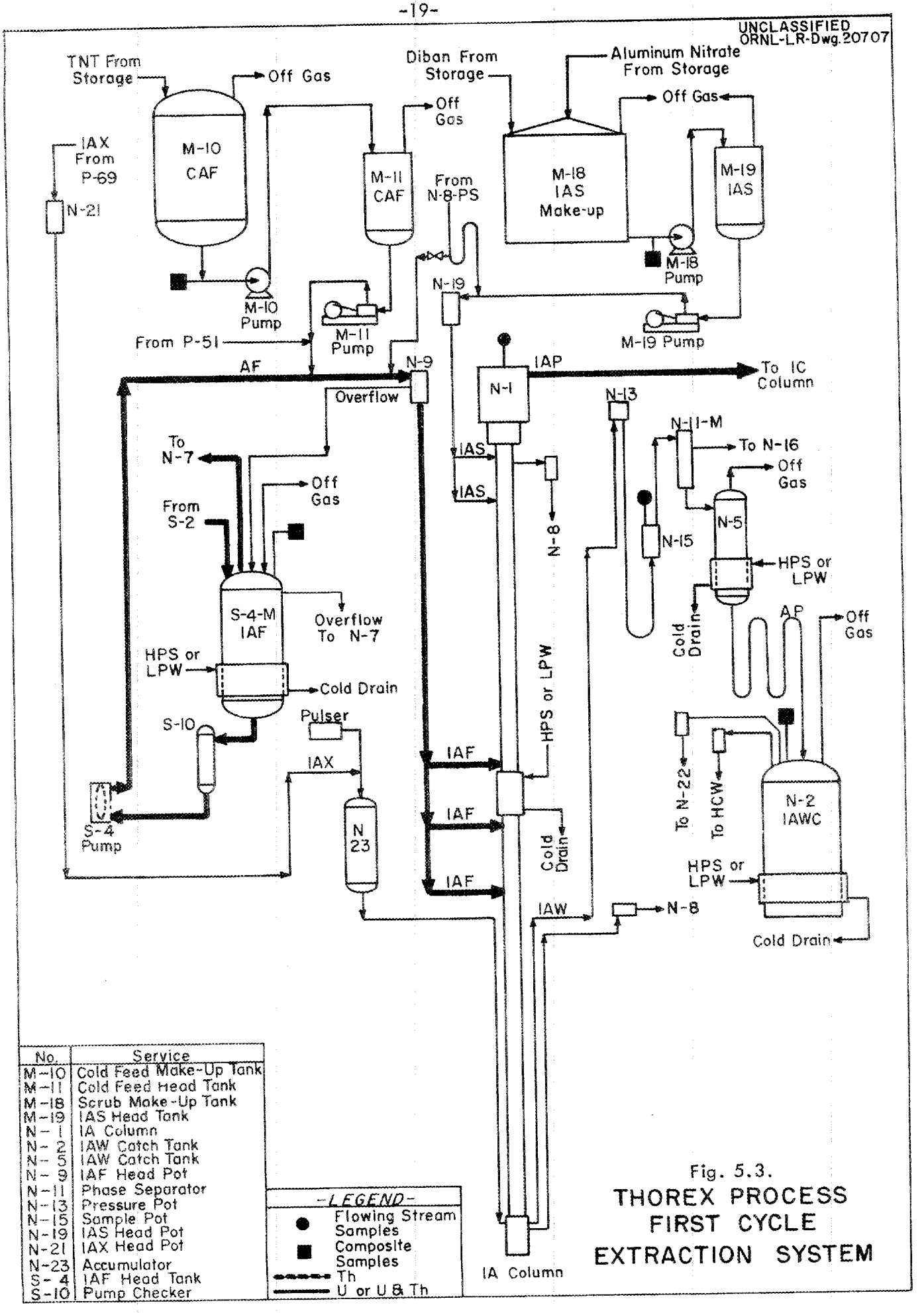

No.	Service
M-10	Cold Feed Make-Up Tank
M-11	Cold Feed Head Tank
M-18	Scrub Make-Up Tank
M-19	IAS Head Tank
N-1	IA Column
N-2	IAW Catch Tank
N-5	IAW Catch Tank
N-9	IAF Head Pot
N-11	Phase Separator
N-13	Pressure Pot
N-15	Sample Pot
N-19	IAS Head Pot
N-21	IAX Head Pot
N-23	Accumulator
S-4	IAF Head Tank
S-10	Pump Checker

-LEGEND-

- ● Flowing Stream Samples
- ■ Composite Samples
- Th
- U or U & Th

Fig. 5.3.
THOREX PROCESS FIRST CYCLE EXTRACTION SYSTEM

UNCLASSIFIED
ORNL-LR-Dwg. 20708

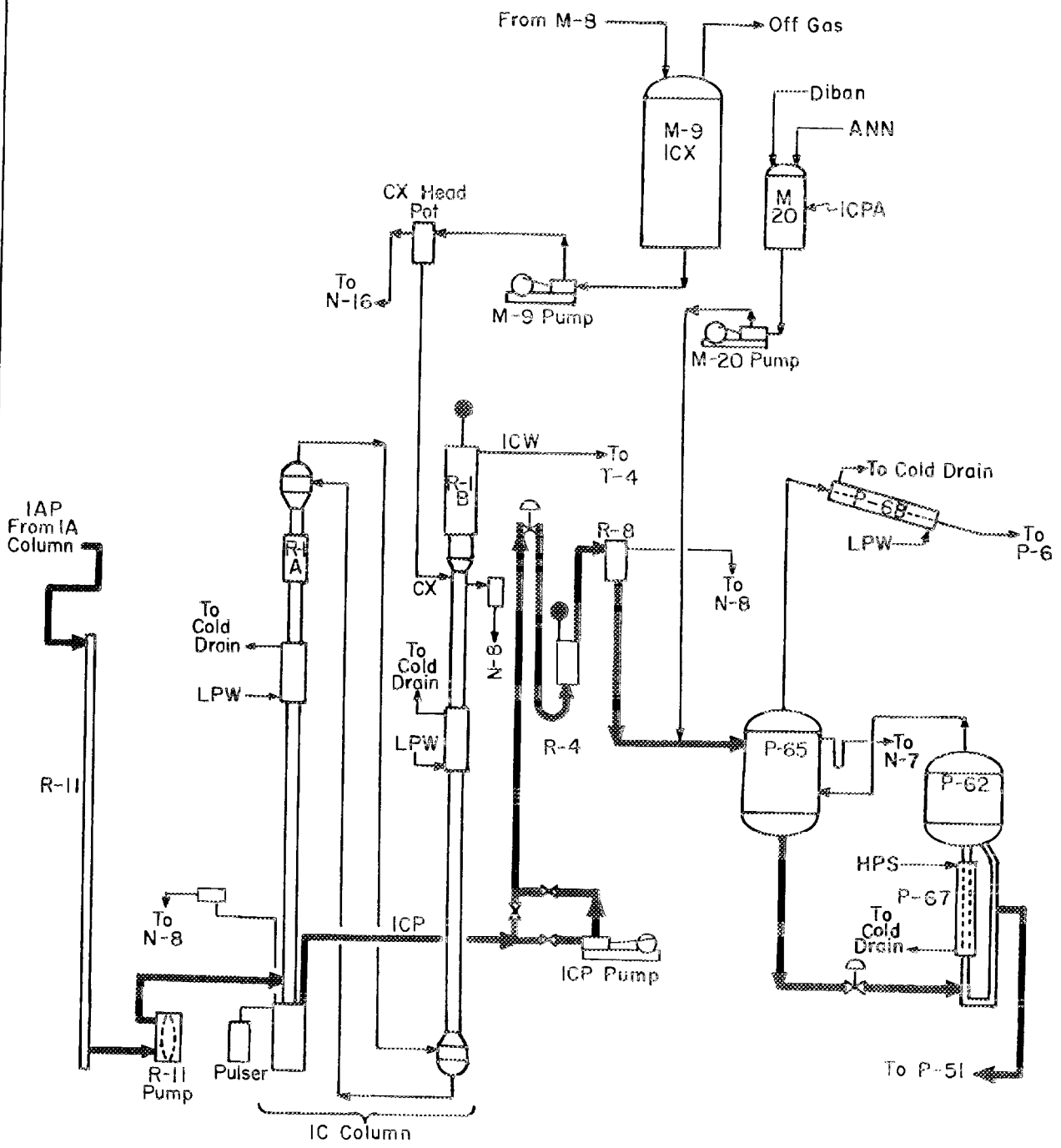

No.	Service
M- 9	CX Head Tank
M-20	ICPA Head Tank
P-62	Evap. Separator
P-65	Evap. Stripper
P-67	Heater
P-68	Condenser
R-I-A, R-I-B	IC Column
R- 4	Sample Pot
R- 8	Phase Separator
R-11	Stand Pipe

●	Flowing Stream Sample
■	Composite Sample
▬	Th
═	U or U & Th

Fig. 5.4.
THOREX PROCESS
FIRST CYCLE
STRIPPING &
EVAPORATING SYSTEM

UNCLASSIFIED
ORNL-LR-Dwg. 20709

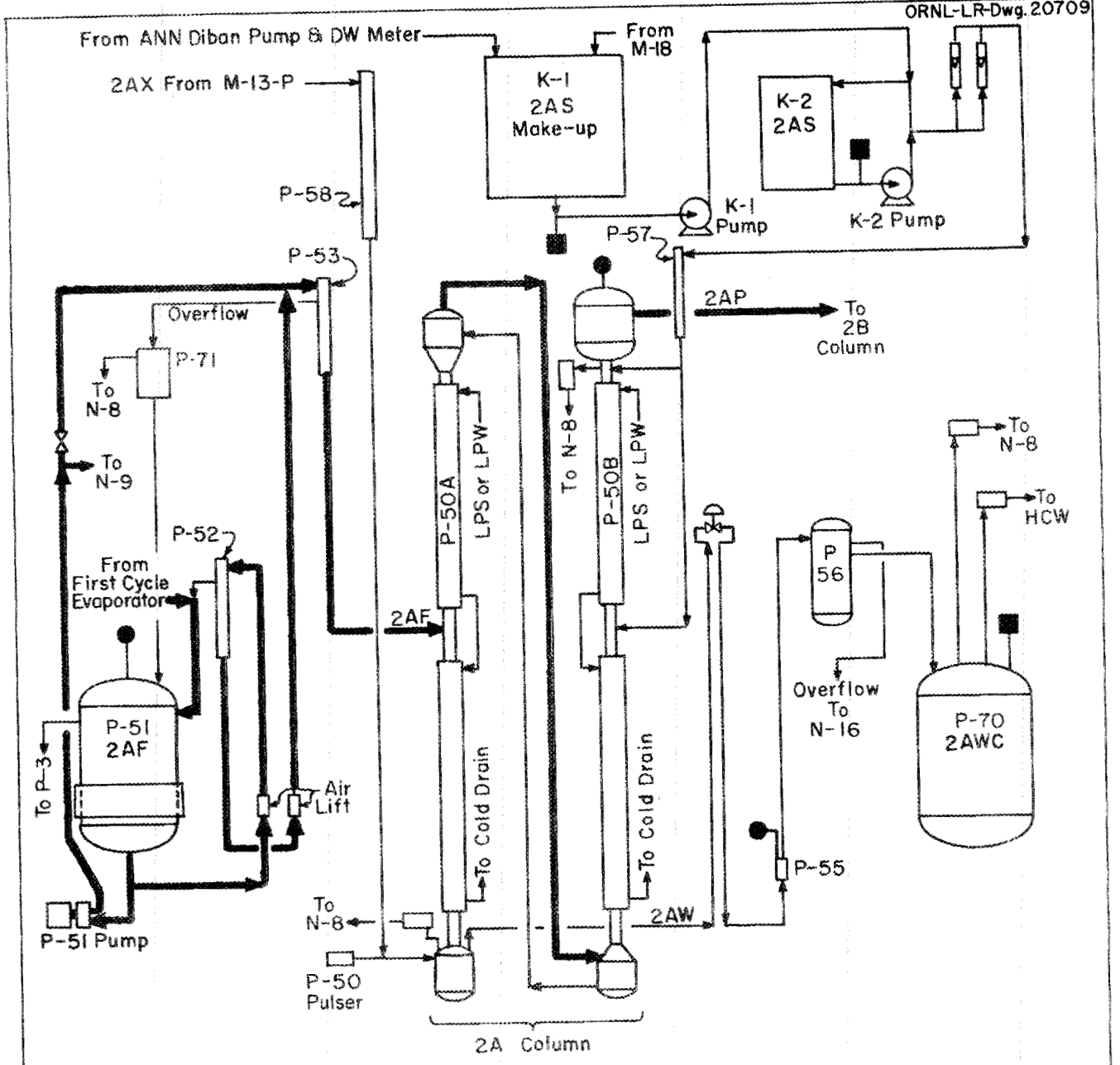

No.	Service
K- 1	2AS Make Up Tank
K- 2	2AS Head Tank
P-50A P-50B	2A Column
P-51	2AF Head Tank
P-52	Separator
P-53	2AF Head Pot
P-55	Sample Pot
P-56	Phase Separator
P-57	2AS Head Pot
P-58	2AX Head Pot
P-70	2AW Catch Tank
P-71	Phase Separator

-LEGEND-
Flowing Stream Samples
Composite Samples
Th
Th & U or U

Fig. 5.5.
THOREX PROCESS
SECOND CYCLE
EXTRACTION SYSTEM

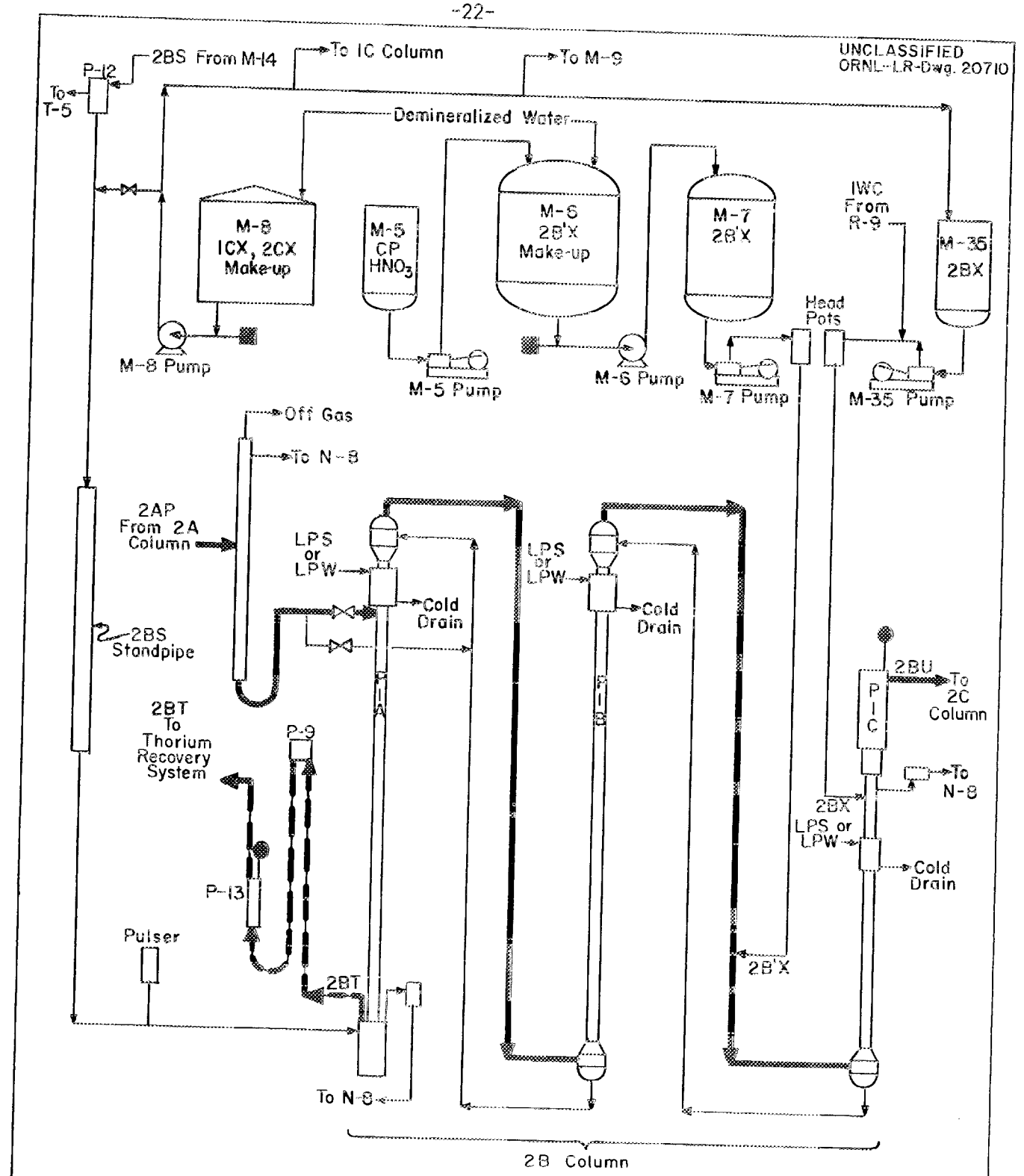

No.	Service
M-5	CP Acid Storage
M-6	2B'X Make up Tank
M-7	2B'X Head Tank
M-8	ICX, 2CX Make up Tank
M-35	2BX Head Tank
P-1-A, P-1-B, P-1-C	2B Column
P-9	Pressure Pot
P-12	2BS Head Pot
P-13	Sample Pot

—LEGEND—	
●	Flowing Stream Sample
■	Composite Sample
———	Th
———	U or U & Th

Fig. 5.6.
THOREX PROCESS
SECOND CYCLE
PARTITIONING SYSTEM

UNCLASSIFIED
ORNL-LR-Dwg. 20711

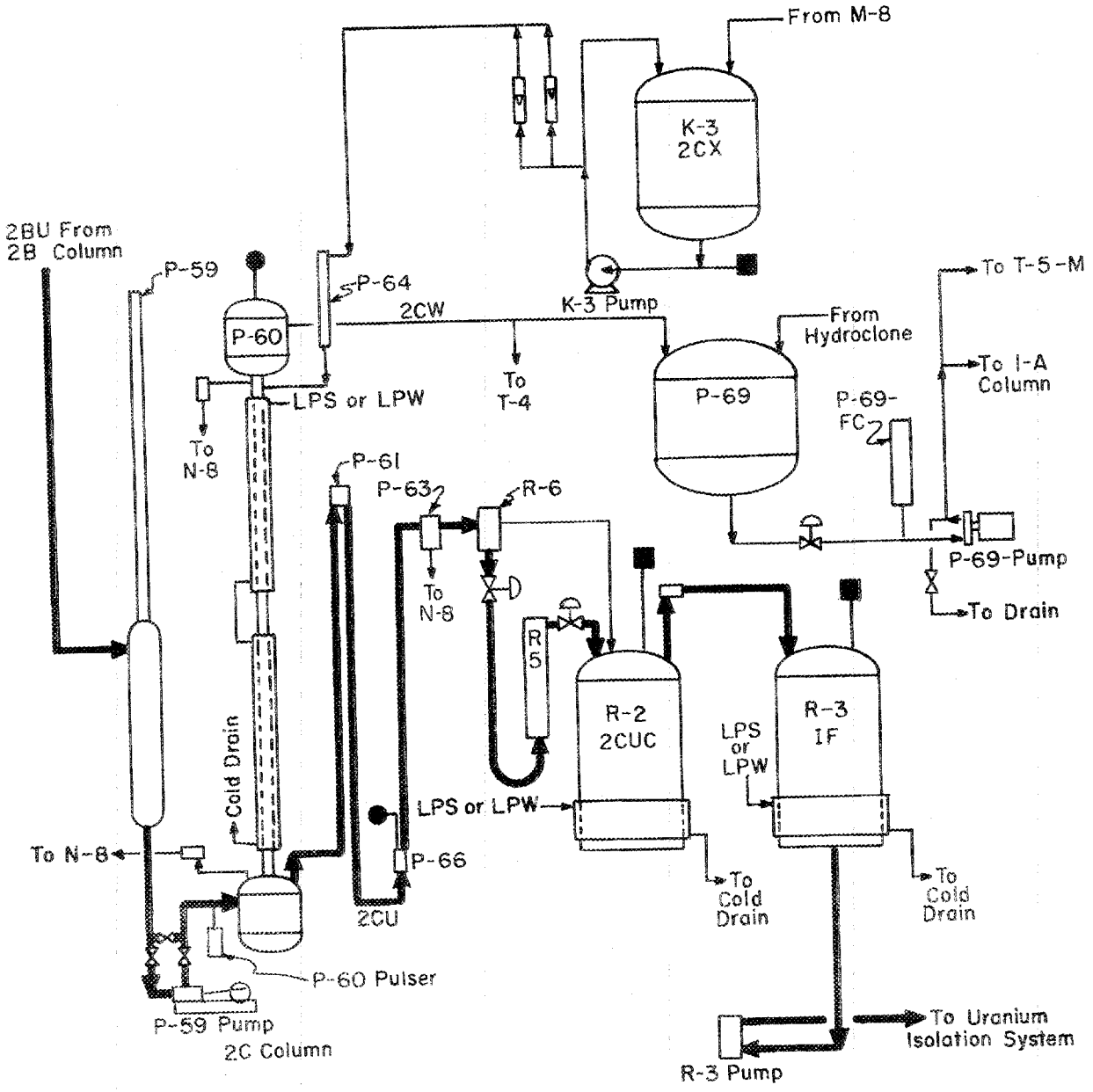

No.	Service
K-3	2CX Head Tank
P-59	2BU Stand Pipe
P-60	2C Column
P-61	Pressure Pot
P-63	Phase Separator
P-64	Stand Pipe
P-66	Sample Pot
P-69	2CW Surge Tank
R-2	1CU Catch Tank
R-3	1CU Head Tank
R-5	Silica Gel Column
R-6	Head Pot

-LEGEND-

- Flowing Stream Samples
- Composite Samples
- Th
- U or U & Th

Fig. 5.7.

THOREX PROCESS
SECOND CYCLE
STRIPPING SYSTEM

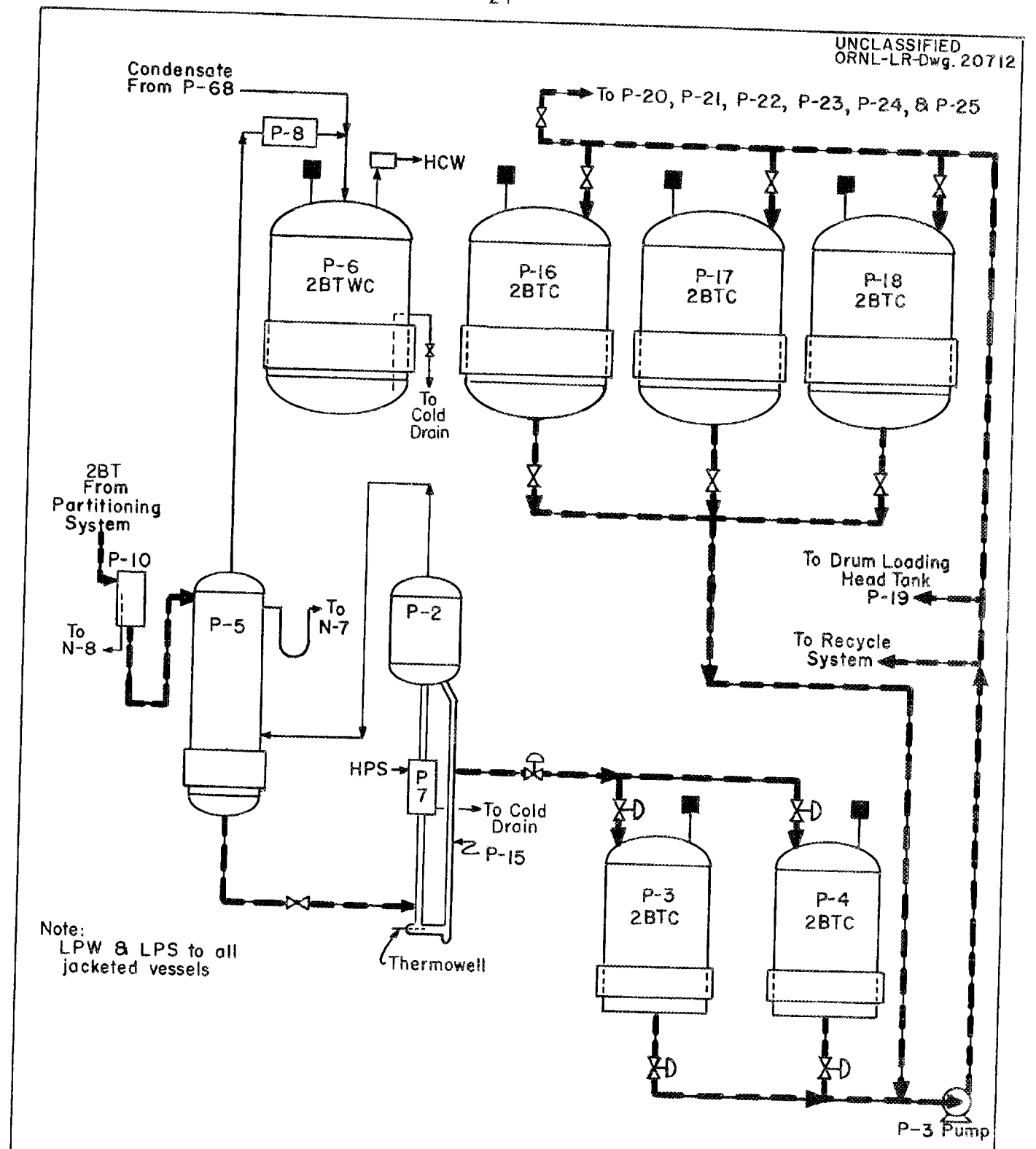

No.	Service
P-2	Vapor Separator
P-3	Concentrated Thorium Catch Tank
P-4	Concentrated Thorium Catch Tank
P-5	B.T. Stripper & Surge Tank
P-6	B.T. Condensate Catch Tank
P-7	B.T. Evaporator Heater
P-8	Evaporator Condenser
P-10	Phase Separator
P-15	Evaporator Loop
P-16	Concentrated Thorium Decay Tanks
P-17	Concentrated Thorium Decay Tanks
P-18	Concentrated Thorium Decay Tanks

—LEGEND—

●	Flowing Stream Sample
■	Composite Sample
— — —	Th

Fig. 5.8.
THOREX PROCESS SECOND CYCLE THORIUM RECOVERY SYSTEM

UNCLASSIFIED
ORNL-LR-Dwg. 20713

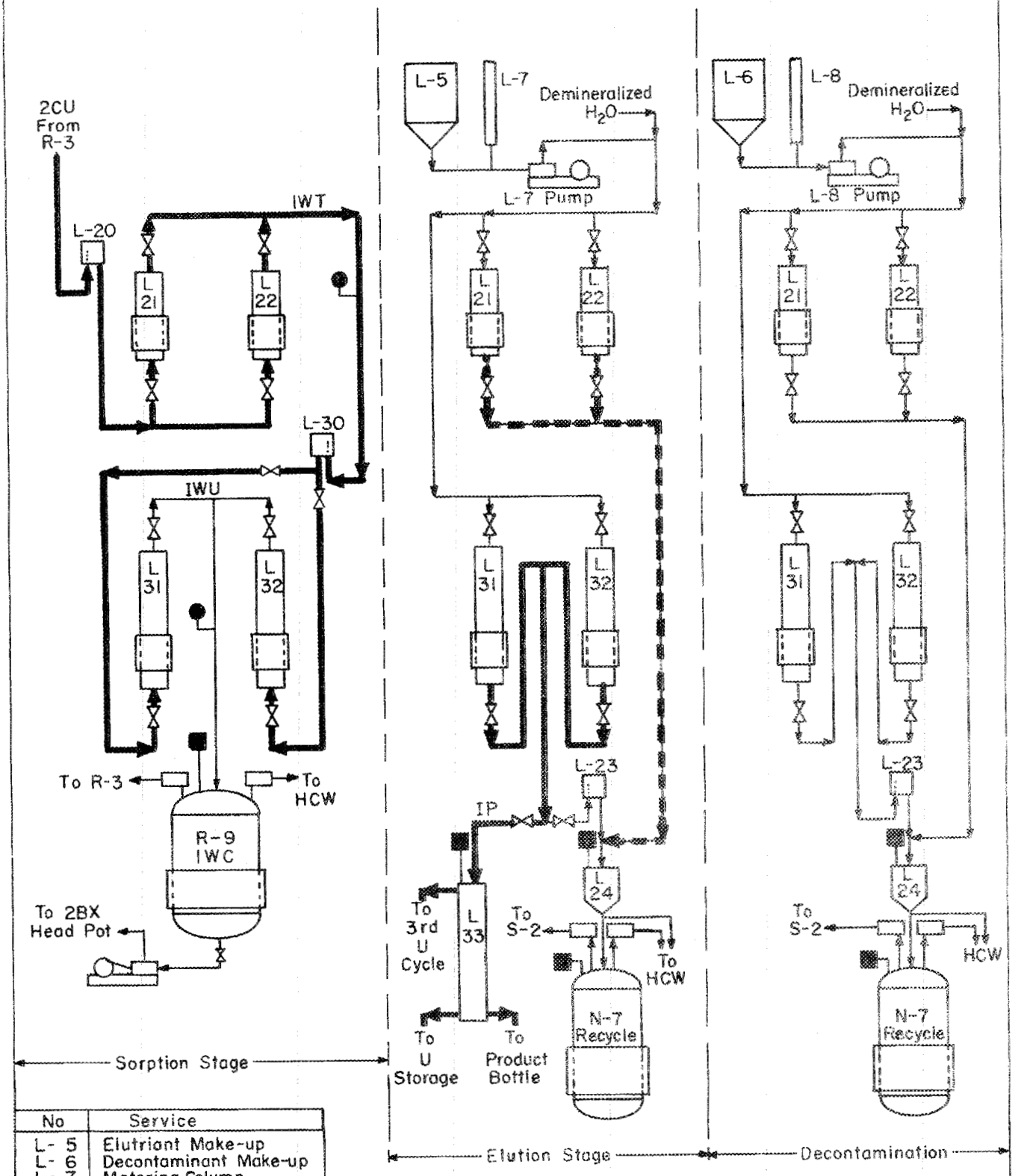

No	Service
L- 5	Elutriant Make-up
L- 6	Decontaminant Make-up
L- 7	Metering Column
L- 8	Metering Column
L-20	Sight Glass
L-21	Contaminant Column
L-22	Contaminant Column
L-23	Sight Glass
L-24	Waste Catch Tank
L-30	Sight Glass
L-31	Product Column
L-32	Product Column
L-33	Product Receiver
N-7	Aqueous Catch Tank
R-9	IW Catch Tank

Note: Hot Water to Column Jackets
LPW or HPS to Tank Jackets

—LEGEND—	
■	Composite Samples
●	Flowing Stream Samples
- - - -	Th
———	U or U & Th

Fig. 5.9.
THOREX PROCESS
URANIUM
ISOLATION SYSTEM

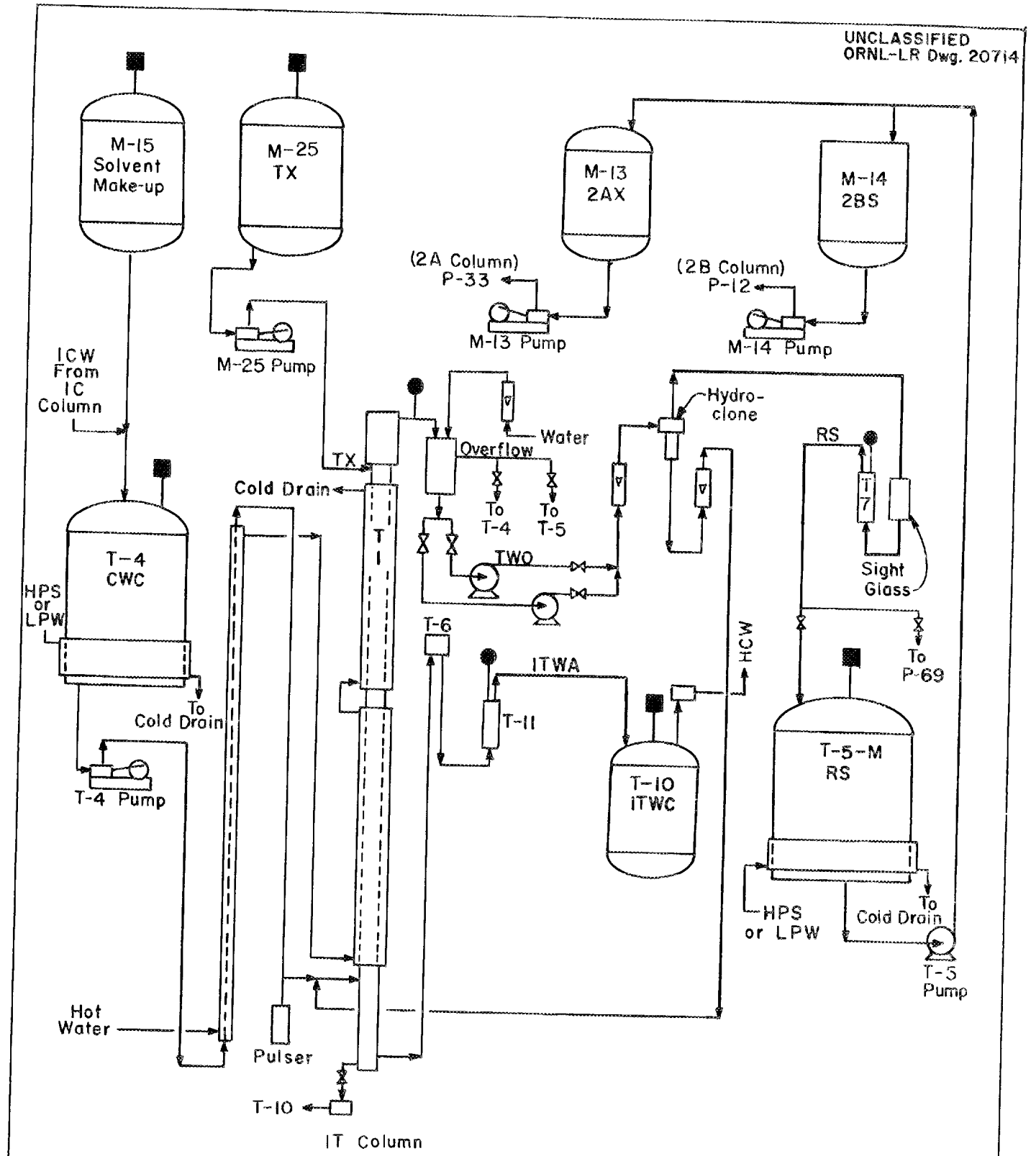

No.	Service
M-13	2AX Head Tank
M-14	2BS Head Tank
M-15	Solvent Makeup Tank
M-25	TX Make up Tank
T-1	IT Column
T-2	Preheater
T-4	ICW Catch Tank
T-5-M	Recovered Solv. Catch
T-6	Pressure Pot
T-7	Sample Pot
T-10	ITWC Catch Tank
T-11	Sample Pot

-LEGEND-	
●	Flowing Stream Sample
■	Composite Sample

Fig. 5.10.
THOREX PROCESS FIRST CYCLE SOLVENT RECOVERY SYSTEM