[redacted]

CENTRAL RESEARCH LIBRARY
DOCUMENT COLLECTION

# AEC RESEARCH AND DEVELOPMENT REPORT

ORNL-2089
Reactors-Power

MARTIN MARIETTA ENERGY SYSTEMS LIBRARIES
3 4456 0350130 6

Cy H

## HRT REACTOR HAZARDS

E. C. Miller

CENTRAL RESEARCH LIBRARY
DOCUMENT COLLECTION
LIBRARY LOAN COPY
DO NOT TRANSFER TO ANOTHER PERSON
If you wish someone else to see this document, send in name with document and the library will arrange a loan.

OAK RIDGE NATIONAL LABORATORY
OPERATED BY
UNION CARBIDE NUCLEAR COMPANY
A Division of Union Carbide and Carbon Corporation
UCC
POST OFFICE BOX P • OAK RIDGE, TENNESSEE

[redacted]

[redacted]

ORNL-2089

cy. 4

Contract No. W-7405-eng-26

# HRT REACTOR HAZARDS

E. C. Miller

DATE ISSUED

JUL 27 1956

CLASSIFICATION CHANGED TO: DECLASSIFIED

BY AUTHORITY OF: TID-1148

BY: R. Morrison 2/25/57

OAK RIDGE NATIONAL LABORATORY
Operated by
UNION CARBIDE NUCLEAR COMPANY
A Division of Union Carbide and Carbon Corporation
Post Office Box P
Oak Ridge, Tennessee

[redacted]

[redacted]

[redacted]

MARTIN MARIETTA ENERGY SYSTEMS LIBRARIES

3 4456 0350130 6

[redacted]



## INTERNAL DISTRIBUTION

1. [redacted]E. Center
2. [redacted]y Library
3. Hea[redacted]Physics Library
4-5. Centra[redacted]search Library
6. Reactor [redacted]rimental Engineeri[redacted]ibrary
7-26. Laboratory R[redacted]ds Department
27. Laboratory Rec[redacted] ORNL R.C.
28. A. M. Weinberg
29. L. B. Emlet (K-25)
30. J. P. Murray (Y-12)
31. J. A. Swartout
32. E. H. Taylor
33. E. D. Shipley
34. C. E. Winters
35. M. L. Nelson
36. W. H. Jordan
37. S. C. Lind
38. F. L. Culler
39. A. H. Snell
40. A. Hollaender
41. M. T. Kelley
42. G. H. Clewett
43. K. Z. Morgan
44. T. A. Lincoln
45. A. S. Householder
46. C. S. Harrill
47. D. S. Billington
48. D. W. Cardwell
49. E. M. King
50. R. N. Lyon
51. J. A. Lane
52. A. J. Miller
53. R. B. Briggs
54. A. S. Kitzes
55. O. Sisman
56. R. W. Stoughton
57. W. R. Gall
58. H. F. Poppendiek
59. S. E. Beall
60. J. P. Gill
61. D. D. Cowen
62. F. T. Binford
63. T. H. J. Burnett
64. R. A. Charpie
65. M. J. Skinner
66. G. E. Boyd
[redacted] R. R. Dickison
[redacted]P. M. Reyling
69. [redacted]C. Miller
70. O[redacted] – Y-12 Technical Library, Do[redacted]ent Reference Section

## EXTERNAL DISTRIBUTION

71. Division of Research and Development, AEC, ORO
72-395. Given distribution as shown in M-3679 under Reactors-Power category

[redacted]

[redacted]

# HRT REACTOR HAZARDS


## ABSTRACT

Several potential hazards that have been recognized and anticipated in the design and fabrication of the pressure vessel for the Homogeneous Reactor Test are discussed. These hazards result from the high operating pressure and temperature of the reactor, the exposure of the reactor vessel material to potential embrittlement and other effects of fast-neutron irradiation, and the need for containment of corrosive flowing liquids. The steps taken in recognition of these hazards are also discussed. The applicability of present codes to the reactor vessel fabrication is considered. Additional fields are suggested where recommended practices developed by code-writing bodies could assist in development-type reactor design and fabrication.


---

This is not a theoretical paper; instead, it is a discussion of some of the very practical problems of applied metallurgy in a specific reactor development program.

The objectives, underlying philosophy, general design criteria, and justification for the Homogeneous Reactor Test (HRT), now being assembled at Oak Ridge National Laboratory, have been presented previously.[1] Prior experience with a small-scale aqueous homogeneous experimental power reactor, the Homogeneous Reactor Experiment (HRE), has been described previously.[2,3] Containment problems of the HRT are discussed in another paper presented at this Conference.[4] Consequently, the description of the HRT here will be limited to that required to state the general design objectives and hazards problems which influenced fabrication of the reactor vessel.

Problems of specific interest from the hazards standpoint result from:

1. the design and fabrication of a vessel for a high-pressure aqueous system at elevated temperatures;
2. the possibility of radiation damage, resulting from exposure of the pressure-vessel structural material to fast-neutron bombardment;
3. the use of a corrosive flowing liquid medium;
4. difficulties in effecting routine periodic inspection and maintenance.

No attempt will be made to deal with these factors in a comprehensive manner, since they are, for the most part, subjects of major research and development programs within the project. Consequently, they will be summarized only to the extent required

---

[1] S. E. Beall and J. A. Swartout, *The Homogeneous Reactor Test*, presented at Geneva at the International Conference, Paper 526A, Session P.7, P.8, August 1955.

[2] S. E. Beall and C. E. Winters, "The Homogeneous Reactor Experiment, A Chemical Engineering Pilot Plant," *Chem. Eng. Progr.* 50(5), 256–262 (1954).

[3] W. R. Gall, "The Homogeneous Reactor Experiment, A Pilot Model Nuclear Power Plant," *Mech. Eng.* 77, 575–580 (1955).

[4] S. E. Beall, *Containment Problems in Aqueous Homogeneous Reactor Systems*, ORNL-2091, presented at USA–UK Joint Meeting on Reactor Hazards in Chicago, Ill., June 12–14, 1956.

[redacted]

to indicate the nature of the hazards problems involved and the steps taken in recognition of these hazards. Some effort will also be given to the explanation of these steps.

## MATERIALS AND FABRICATION

The achievement of neutron economy and minimum critical mass indicates that the diameter of a nuclear reactor should, in general, approximate its length. This is in contrast with the practice in high-pressure chemical plants, where capacity in a vessel is often achieved by designing it with a length several times its diameter. To achieve a substantial power capacity in pressurized aqueous nuclear reactors, using Code-approved pressure-vessel materials and safety factors, this diameter requirement and the resultant vessel wall thicknesses will soon tax the current practicable limits of conventional fabricating practice. Fortunately, in the case of the HRT, the 5- to 10-Mw design power permitted the accomplishment of objectives for the reactor, with a 5-ft-dia spherical vessel having a 4-in. wall thickness (Fig. 1). While the dimensions of this

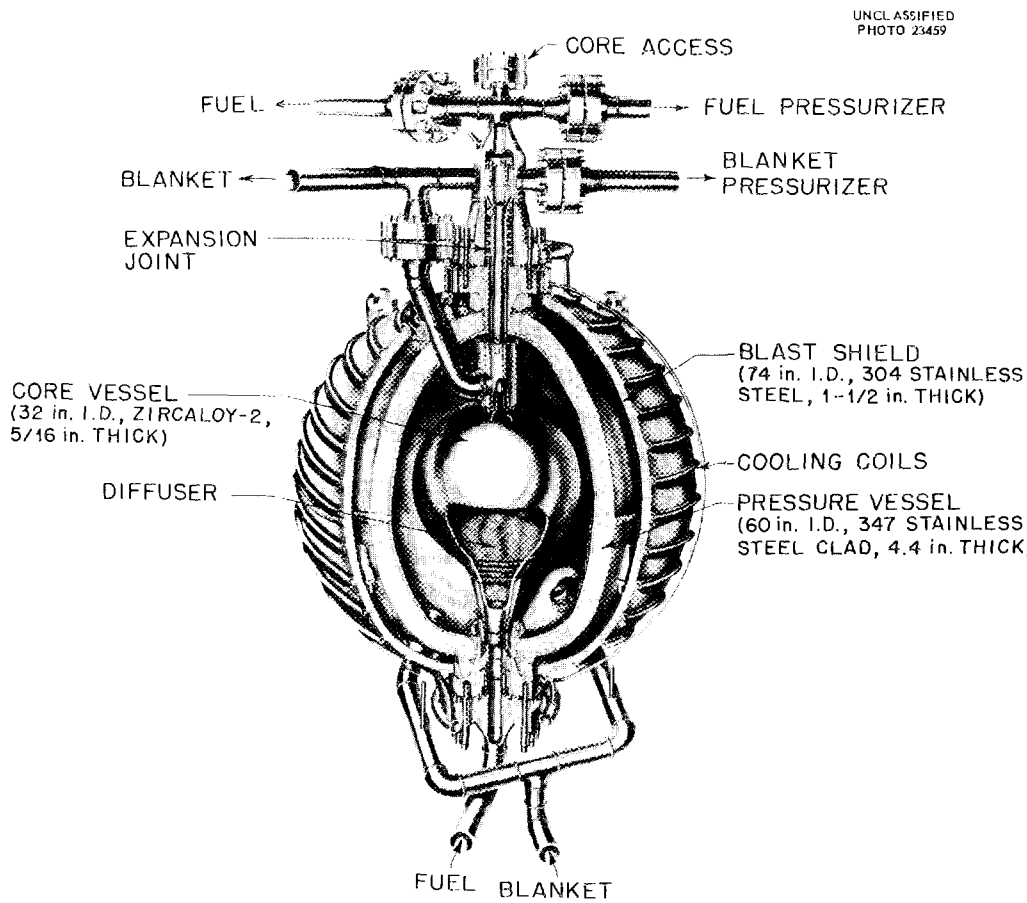


**Fig. 1. HRT Reactor Vessel Assembly.**

pressure vessel did not exceed the limitations of fabricating practice, they did present some unusual problems in materials selection and fabrication. The principal structural material selected for the vessel was a carbon steel conforming to ASME Boiler Code specification SA 212, grade B, firebox quality, manufactured to SA 300, aluminum-killed, fine-grained, low-temperature practice. This 5-ft-ID spherical carbon steel vessel was internally clad with a 0.4-in. thickness of a columbium (niobium) stabilized 18-8, type 347 austenitic stainless steel, conforming essentially to specification SA 167. Typical chemical compositions and mechanical properties of these materials are indicated in Table 1. The relatively unusual fabrication practices occasioned by the size, design, and materials of the reactor included the forming of the hemispherical heads, the closure-joint girth weld, which had to be made entirely from the outside, and, of course, the unique accomplishment of forming and welding the 32-in. zirconium-alloy core vessel. The core tank, however, does not come under the strict hazards classification. The detailed fabrications of the pressure vessel and the zirconium-alloy core tank have been previously described.[5,6] Some of the welding practices will be mentioned later in this paper.

[5] L. F. Bledsoe, F. V. Daly, G. E. Elder, W. R. Gall, and E. C. Miller, *Fabrication of the Homogeneous Reactor Test Vessel Assembly*, presented at Buffalo meeting of the American Welding Society, May 8, 1956. To be published in *The Welding Journal*, Sept. 1956.

[6] L. F. Bledsoe, F. V. Daly, G. E. Elder, and E. C. Miller, *The Fabrication of a Large Zirconium Tank*, presented to Engineers Joint Council (AIME) Meeting in Cleveland, Ohio, December 1955; published in *Journal of Metals*, May 1956.

**TABLE 1. PHYSICAL PROPERTIES AND CHEMICAL ANALYSES OF PRESSURE-VESSEL MATERIALS**

| | Inlet Head | | Outlet Head | |
|---|---|---|---|---|
| | Base | Cladding | Base | Cladding |
| Physical properties | | | | |
| Yield strength, psi | | 55,000 | | 46,700 |
| Tensile strength, psi | 78,000 | 77,500 | 78,500 | 78,900 |
| Elongation, % | | 32 | | 31 |
| Shear strength, psi | 24,800 | | 24,000 | |
| Chemical analyses, % | | | | |
| C | 0.16 | 0.054 | 0.26 | 0.053 |
| Mn | 0.50 | 1.72 | 0.80 | 1.52 |
| P | 0.022 | 0.026 | 0.021 | 0.025 |
| S | 0.036 | 0.010 | 0.029 | 0.027 |
| Si | 0.24 | 0.57 | 0.22 | 0.69 |
| Ni | | 11.29 | | 11.07 |
| Cr | | 18.63 | | 18.27 |
| Nb | | 0.68 | | 0.67 |

## RADIATION EFFECTS

When the reactor is in operation, the pressure vessel of the HRT will be subjected to fast-neutron irradiation. It is estimated that at the inner surface of the vessel this irradiation may be from $10^{19}$ to $10^{20}$ *nvt* (fast) at a temperature of about 600°F, over a sustained operating period of, say, one year. Fast-neutron irradiation may under some circumstances produce significant changes in the properties of carbon steels and other structural materials – in particular, the ductile-brittle transition temperature.

Sutton and Leeser[7] have published data indicating that carbon steels subjected to fast-neutron irradiation ranging from about $10^{18}$ to $10^{20}$ *nvt*, at estimated temperatures of 125 to 580°F, undergo significant increases in this ductile-brittle transition temperature, as well as decreases in maximum-fracture-energy values. These data are summarized in Table 2. Wilson and Berggren[8] have confirmed and extended this work. Some of their results are presented in Fig. 2, which represents the changes in impact properties of normalized SA 212 grade B carbon steel irradiated at temperatures below 195°C. Figure 3 illustrates the dependence of several mechanical properties of the same carbon steel on integrated fast-neutron flux. These results admittedly appear somewhat discouraging, but additional experimental data are essential to an accurate prediction of the ultimate behavior of a reactor pressure vessel in service. This is not intended as a criticism of the results of the work cited, for the experimental techniques required to obtain these data are difficult and time-consuming, and the facilities available for such investigations are still very limited. It is important that long-time irradiation be conducted at the approximate operating temperature of the reactor to determine whether or not a saturated or steady-state condition will ultimately be reached such that the damage falls short of that required to endanger the safety of the reactor. Wilson and Berggren

[7] C. R. Sutton and D. O. Leeser, "Radiation Effects on Structural Materials," *Chem. Eng. Progr. Symposium Ser.* 50(12), 208–221 (1954).

[8] J. C. Wilson and R. G. Berggren, *Effects of Neutron Irradiation in Steel*, presented at the Annual Meeting of the American Society for Testing Materials, in Atlantic City, N. J., June 26, 1955.

TABLE 2. EFFECT OF IRRADIATION ON IMPACT PROPERTIES OF CARBON STEELS

| Steel | Flux, Fast (*nvt*) | Reactor Irradiation Temperature Range (°F) | Transition Temperature Range (°F) | | Maximum Energy Absorbed at 100% Ductile Fracture (ft-lb) | |
|---|---|---|---|---|---|---|
| | | | Controls | Irradiated | Controls | Irradiated |
| Aluminum-killed 0.34 carbon steel | $2 \times 10^{18}$ | 300–490 | 15–40 | 35–60 | 5.5 | 5.3 |
| SA 212 (stress-relieved) | $2 \times 10^{18}$ | 510–610 | 140–160 | 185–205 | >9.5 | 8.5 |
| SA 212 (stress-relieved) | $8 \times 10^{19}$ | 70–140 | 125–160 | 285–330 | 6.5 | 4.5 |

are presently extending their work to obtain this information, using a Code-specification carbon steel manufactured to fine-grain practice (SA 300–SA 212, grade B). Because of the experimental difficulties of duplicating, in small-scale irradiation tests and samples, the environmental combinations of stress, temperature, thermal gradient, and radiation intensity which are anticipated in a reactor, the HRT reactor vessel itself can be considered a large-scale irradiation experiment.

In the absence of sufficient experience and experimental data, some speculation, however erroneous it may ultimately prove to be, may be suggested. Solid-state reactions, including precipitation and aging, as well as annealing-out effects, may be activated by neutron irradiation at temperatures lower than those at which they occur in the absence of irradiation. The possibility of annealing-out radiation damage at operating temperatures is, of course, encouraging. On the other hand, the maximum operating temperature of the HRT approximates the temperature at which strain aging, reputedly due to a strain-induced nitride precipitation, occurs in some carbon steels. The possibility that a vessel under stress due to pressure, or, for that matter, unstressed, may undergo a similar metallurgical change under the influence of radiation may warrant consideration. The answer to the radiation-damage problem in pressure-

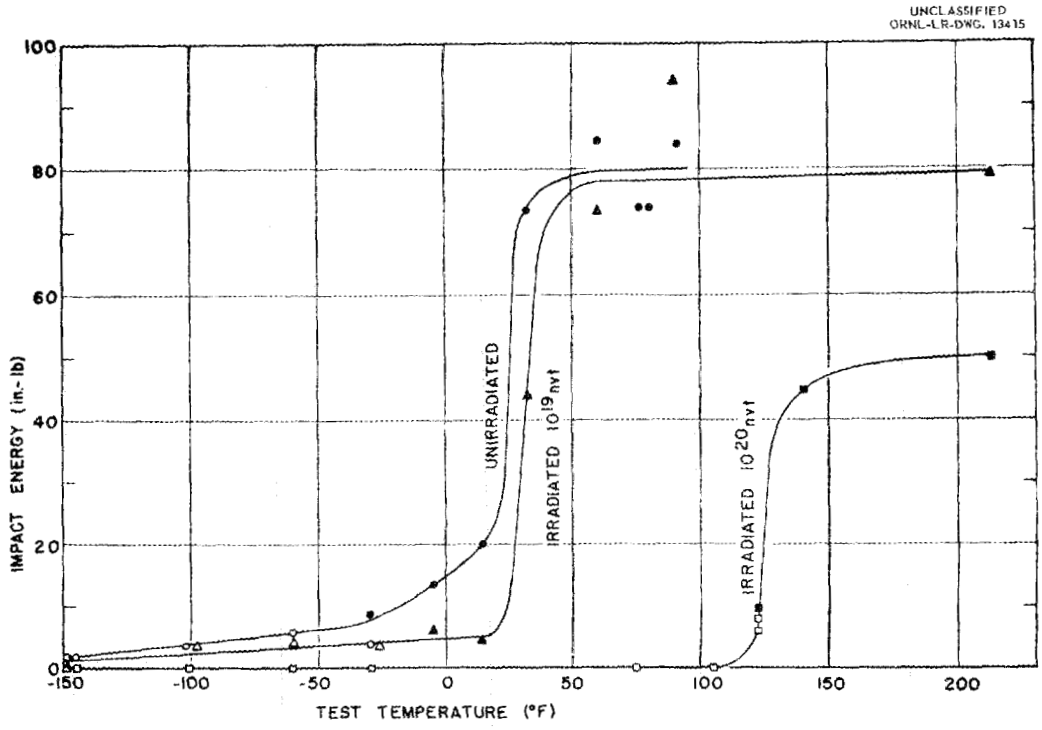


**Fig. 2. Effect of Radiation on Impact Energy of A-212B Carbon-Silicon Steel Normalized from 1900°F.** Solid points indicate complete fracture; open points indicate incomplete fracture; maximum temperature during irradiation was 195°F.

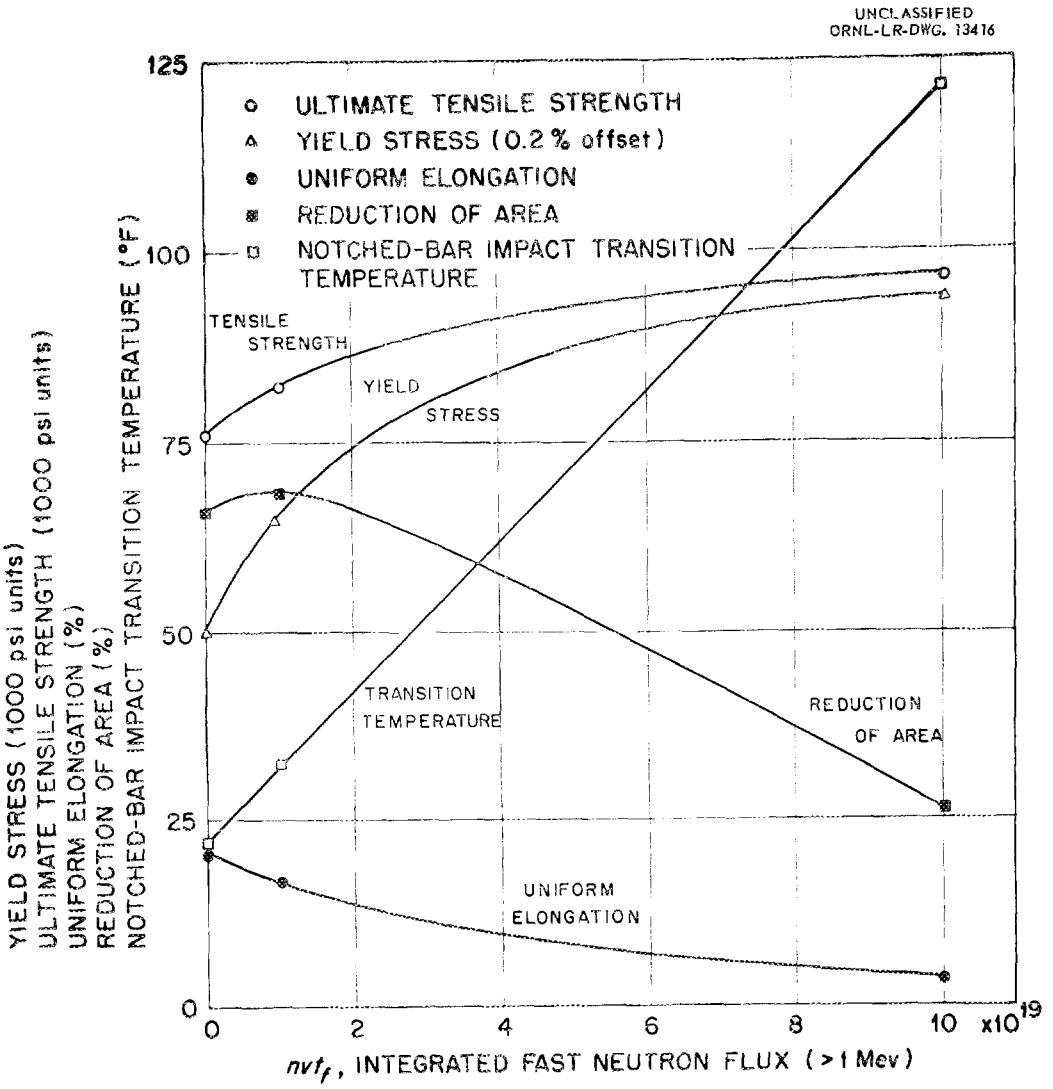


**Fig. 3. Integrated Fast-Neutron Flux Dependence of Several Mechanical Properties of A-212B Carbon-Silicon Steel.**

vessel steels will become more probable as the experimental work of the solid-state metallurgists contributes to a fundamental understanding of the radiation-induced solid-state reactions involved.

## CORROSION

Corrosion is a major problem in aqueous-solution-type homogeneous reactors. In some combinations of concentration, temperature, velocity, and other conditions of chemical and physical environment, the solutions can be quite innocuous, but in other combinations their containment becomes a major problem. Depending on these conditions, the uranyl sulfate solution may be variously capable of general corrosion,

intergranular attack, impingement or velocity effects, radiation corrosion, crevice corrosion, and perhaps stress-corrosion cracking. There is not space here to detail or describe these conditions or effects. However, insofar as hazards that affect design and fabrication of pressure vessels are concerned, corrosion has its principal influence on the selection of the corrosion-resistant inner lining and on the welding techniques employed to ensure against leaks or crevices through which the corrosive solutions may penetrate.

As stated in the discussion of reactor vessel materials, a columbium-stabilized 18-8 austenitic stainless steel, type 347, was used for this corrosion-resistant lining. A solution concentration was selected to accomplish the nuclear and engineering objectives of the reactor with a minimum probability of corrosion attack. Being an experimental reactor, however, corrosive environments more severe than the stainless steel can withstand indefinitely may be employed at a later date. In such a case, the suitability of stainless steel may become marginal, and serious consideration will have to be given to the use of titanium, zirconium, or other material as a corrosion-resistant lining in subsequent reactors. However, the fabrication problems involved in the development of such linings appeared to be too great to allow HRT construction schedules to be met.

## INSPECTION

The problems of inspection and maintenance (to achieve long-time integrity) of a system as highly radioactive as a homogeneous reactor are met most effectively in the original fabrication of the vessel. The vessel was fabricated in accordance with the best available commercial practice for such work and has been certified as conforming with the design and fabrication requirements of the Unfired Pressure Vessel Code. This certification is limited, of course, to its adequacy as a pressure vessel, since the Code has not yet established standards for reactors as such.

From the standpoint of hazards as related to welding practice, the following items were of particular concern:

1. integrity of the stainless steel welds in contact with corrosive solutions;
2. effecting attachment of the unbonded stainless steel nozzle liners to the stainless steel cladding inside the pressure-vessel shell, without depending solely upon a strength weld in the stainless steel;
3. mechanical soundness of the main girth weld in the pressure vessel, which had to be made entirely from the outside and involved a transition from a stainless steel to a carbon steel weld deposit.

The inert-gas-shielded tungsten-arc process was used for all stainless steel weld surfaces which were to be in contact with fuel solution. When the outer surface of a weld was to contact the fuel solution, the final $\frac{1}{8}$ in. or more was deposited in this

manner. When the root pass was to contact the fuel solution, a preplaced consumable root insert was fused into the first pass, and at least one more layer of filler metal was added by the tungsten inert-gas process. The manual metallic-arc process, using coated electrodes, was used in other weld deposits in the stainless steel pressure joints. Internal surfaces of the stainless steel welds were protected by inert gas. Figure 4 shows schematically the joint design for butt welding stainless steels where all welding was done from one side.

Where stainless steel was joined to carbon steel, lime-coated, 25-20, chromium-nickel electrodes were used, except in the transition layers of the main girth weld. In providing stainless steel linings for the nozzle pipes, the principal unusual feature was the mechanical support of the stainless steel nozzles by shear rings, which avoided making a strength weld the only support against the mechanical stresses introduced in the joint. This was accomplished as shown in Fig. 5.

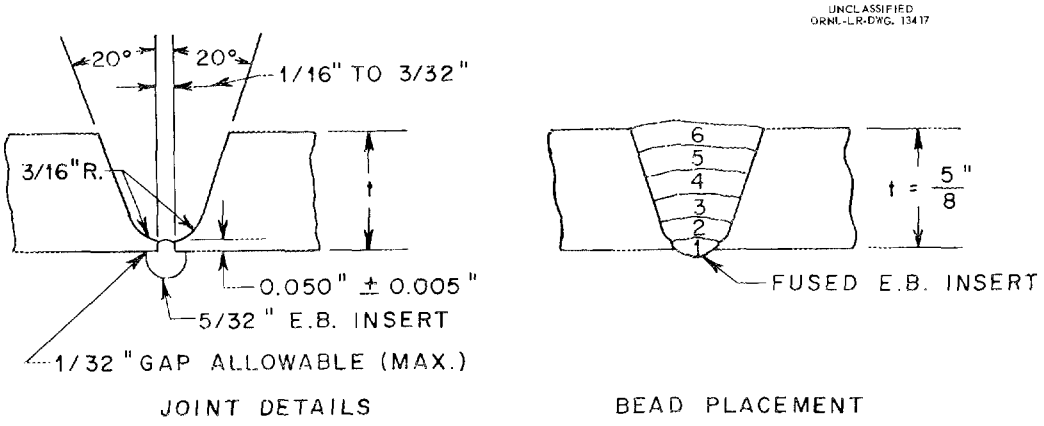


**Fig. 4. Weld Joint Design for Stainless Steel.**

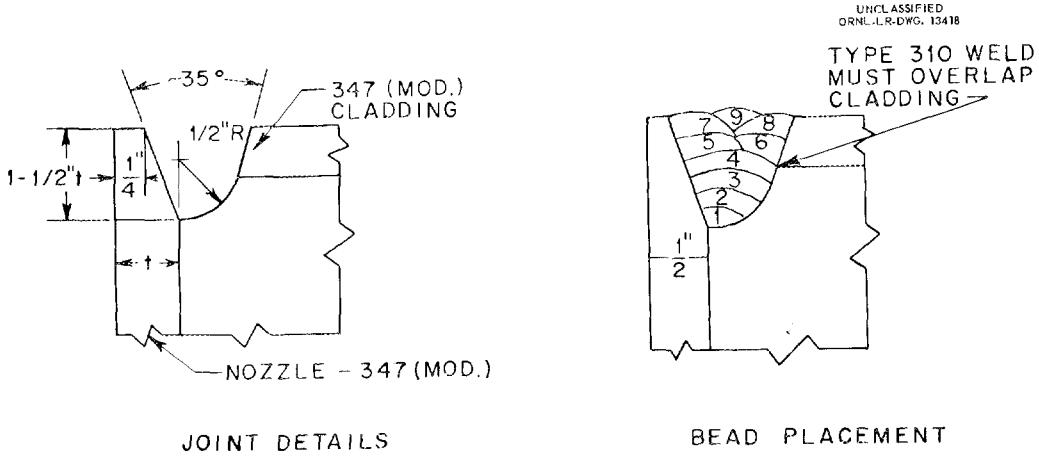


**Fig. 5. Weld Design for Dissimilar-Metal Joints.**

The final-closure-joint design is shown in Fig. 6. The tungsten inert-gas process was used to fuse the preplaced stainless steel insert in the first pass and to build up the joint with added filler metal to within $\frac{1}{16}$ in. of the interface. Here, two layers of 19-9 extra-low-carbon (308L) filler metal were added to bring the deposit up to the interface. This filler metal was followed by two layers of low-carbon Armco-ingot-iron-coated electrode deposit; small stringer beads and low amperage were used to minimize dilution. The joint was then completed with a low-hydrogen carbon-steel-coated electrode, E7016.

All joints were radiographed. Each stainless steel layer was visually inspected under 20X magnification. Upon completion, the stainless steel welds were inspected, on both sides where accessible, with liquid dye penetrant. Magnetic-particle inspection was used throughout the welding of the carbon steel portion. No porosity or inclusions of any sort were permitted in the stainless steel weld layers which were to be in contact with process solution. In all other welds, the porosity was limited to one-half that permitted by the ASME Boiler and Pressure Vessel Code standards. Stress relief was employed for the carbon steel portion of the welds and adjacent base metal, but of

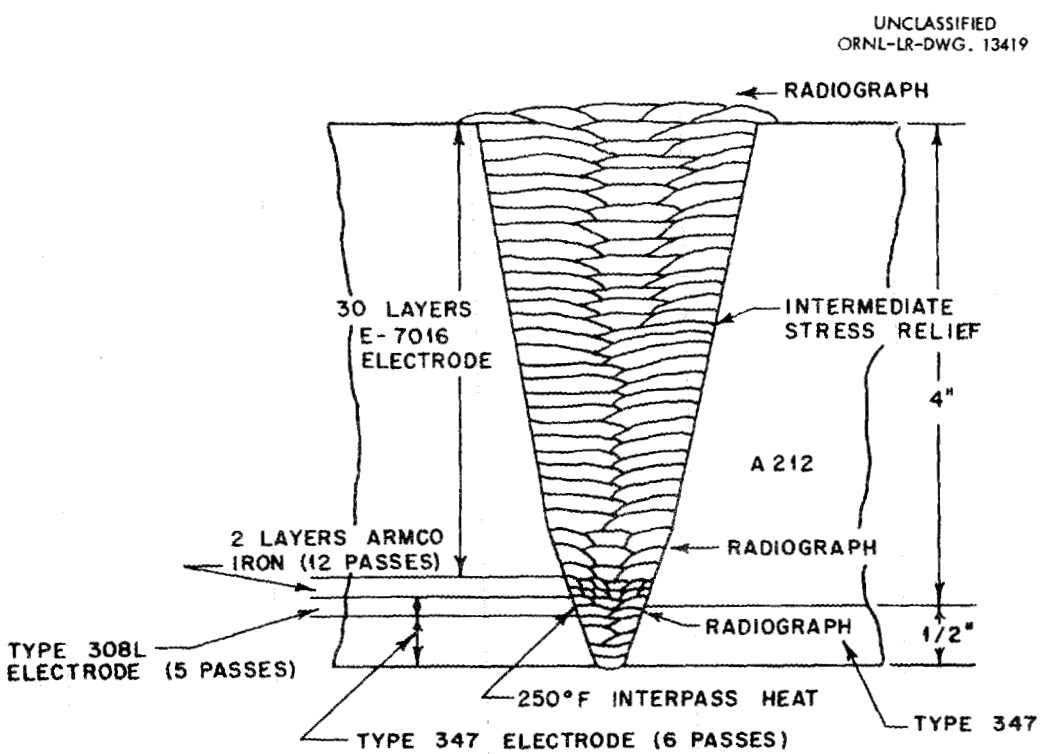


**Fig. 6. Joint Design and Bead Sequence of Final Closure Weld.**

course the stainless steel weld metal was also heated to this stress-relieving temperature. For this reason the stress-relieving temperature was maintained at about 975°F for periods up to 25 hr, it having been determined experimentally that this treatment would not sensitize the stainless steels.

## CONTAINMENT AND MAINTENANCE

Thus far, the precautions taken in the design and fabrication of the pressure vessel to minimize the possibilities of a failure have been discussed. Still to be considered are the provisions made to accomplish containment of the liquids and possible fragments and to effect repair in the event that these precautions are still insufficient to prevent a failure. These include the containment cell, the blast shield, and underwater maintenance, which are to be discussed in another paper.

## CODES

The invitation to submit papers to this Conference contained a portion dealing with pressure vessels, in which it was suggested that the adequacy of present codes be included in the discussion. Even though the HRT vessel was certified and stamped as conforming to the design and construction requirements for pressure vessels of the ASME Boiler and Pressure Vessel Code, it is recognized that this does not constitute assurance of long-time performance in the operating environment of a homogeneous power reactor.

Some of the information essential to establishment of a code for the design and construction of homogeneous reactors will have to come from experience in operating this test and subsequent reactor tests and from experience in supporting research and development programs. Nevertheless, there are numerous features pertaining to details of design, fabrication, and even research where the code might well provide practical guidance, at least in the form of nonmandatory recommendations.

Because of the enormous experimental difficulties in the study of radiation effects, particularly with respect to changes in ductile-brittle transition temperatures, investigators are faced with the problems of selecting suitable test specimens and test methods and of interpreting the data. It would be most valuable to have a consensus opinion or recommended practice from a code-writing or -regulating body, suggesting specimen sizes and geometries and interpretive criteria, taking into consideration the experimental difficulties involved, which would be acceptable to the code committees as a basis for establishing permissible design values.

The use of inert-gas-shielded tungsten-arc welding permits the production of fabrication welds which lend themselves to minute inspection and which are essentially free from porosity or inclusions. Acceptance criteria are needed for the inspection of such welds, including detailed provisions for liquid-penetrant use and radiographic sensitivity and porosity requirements more exacting than present code standards.

Because of thermal stresses and gradients, heat-transfer problems, possibilities of thermal fatigue, and vessel diameters, consideration may well be given to the modification of design concepts to permit the use of stronger materials in thinner sections, and with lessened safety factors.

While the Code places responsibility on the user for the selection of corrosion-resistant materials, many design and fabricating problems arise in making clad and lined vessels. These could be covered more extensively in the form of more detailed recommended practices, covering such items as lined-nozzle attachment and support, the use of completely unbonded linings, the methods of attaching applied liners, and the joining of dissimilar metals.

The demand for absolute integrity of the reactor system, a possible need for reduction of design safety factors, and the requirement that heat transfer be completely uninterrupted by laminations in the materials indicate the need for the establishment of Code-accepted standards for ultrasonic, liquid-penetrant, and possibly other types of inspection, for application to plate and tubular products.

## CONCLUSIONS

Possible hazards resulting from high pressures and temperatures, radiation damage, corrosion, and inability to maintain periodic inspections have been recognized and provided for, insofar as possible. The operation of the reactor will in part serve for experimental evaluation of these hazards and help determine Code standards for reactors. In the absence of all the information required to establish mandatory Code provisions, nonmandatory recommended practices could well provide valuable assistance to experimental reactor development programs.