MARTIN MARIETTA ENERGY SYSTEMS LIBRARIES

3 4456 0352967 0

ORNL-1199
Metallurgy
10a

AN AUTOMATIC MULTIRANGE RECORDING DEVICE FOR MEASURING VARYING POTENTIALS

CENTRAL RESEARCH LIBRARY
DOCUMENT COLLECTION

LIBRARY LOAN COPY

DO NOT TRANSFER TO ANOTHER PERSON

If you wish someone else to see this document, send in name with document and the library will arrange a loan.

OAK RIDGE NATIONAL LABORATORY
OPERATED BY
CARBIDE AND CARBON CHEMICALS COMPANY
A DIVISION OF UNION CARBIDE AND CARBON CORPORATION
UCC
POST OFFICE BOX P
OAK RIDGE, TENNESSEE

ORNL 1199

This document consists of 32 pages.

Copy 10 of 331. Series A

Contract W-7405-eng-26

SOLID STATE DIVISION

AN AUTOMATIC MULTIRANGE RECORDING DEVICE FOR MEASURING VARYING POTENTIALS

J. C. Pigg

DATE ISSUED

OAK RIDGE NATIONAL LABORATORY
Operated by
CARBIDE AND CARBON CHEMICALS COMPANY
A Division of Union Carbide and Carbon Corporation
Post Office Box P
Oak Ridge, Tennessee

MARTIN MARIETTA ENERGY SYSTEMS LIBRARIES

3 4456 0352967 0

ORNL 1199
Metallurgy

INTERNAL DISTRIBUTION

1. G. T. Felbeck (C&CCC)
2-3. Chemistry Library
4. Physics Library
5. Biology Library
6. Health Physics Library
7. Metallurgy Library
8. Reactor Experimental Engineering Library
9-10. Training School Library
11-14. Central Files
15. C. E. Center
16. C. E. Larson
17. W. B. Humes (K-25)
18. W. D. Lavers (Y-12)
19. A. M. Weinberg
20. E. H. Taylor
21. E. D. Shipley
22. D. S. Billington
23. F. C. VonderLage
24. R. C. Briant
25. J. A. Swartout
26. S. C. Lind
27. F. L. Steahly
28. A. H. Snell
29. A. Hollaender
30. M. T. Kelley
31. G. H. Clewett
32. K. Z. Morgan
33. J. S. Felton
34. A. S. Householder
35. C. S. Harrill
36. C. E. Winters
37. D. W. Cardwell
38. E. M. King
39. C. P. Keim
40. L. K. Jetter
41. E. J. Boyle
42. W. D. Manly
43. C. D. Susano
44. B. S. Borie
45. R. J. Gray
46. E. E. Stansbury
47. G. P. Smith
48. J. E. Cunningham
49. E. C. Miller
50. A. Brasunas
51. A. G. H. Andersen
52. J. O. Betterton
53. R. B. Oliver
54. P. Patriarca
55. T. H. Blewitt
56. J. H. Crawford
57. W. E. Taylor
58. O. Sisman
59. G. W. Keilholtz
60. J. T. Howe
61. R. H. Kernohan
62. S. E. Dismuke
63. J. C. Wilson
64. W. J. Sturm
65. M. T. Robinson
66. J. W. Cleland
67. A. F. Cohen
68. J. C. Pigg
69. M. C. Wittles
70. G. T. Murray
71. R. A. Weeks
72. W. W. Parkinson
73. C. D. Bopp
74. C. D. Baumann
75. J. B. Trice
76. J. G. Morgan
77. G. E. Klein
78. R. G. Berggren
79. D. K. Holmes
80. D. K. Stevens
81. A. J. Miller
82. R. S. Livingston
83. R. J. Jones
84. D. D. Cowen
85. P. M. Reyling
86. M. J. Skinner
87. Central Files (O.P.)

EXTERNAL DISTRIBUTION

88-331. Given distribution as shown in TID-4500 under Metallurgy Category.

DISTRIBUTION PAGE TO BE REMOVED IF REPORT IS GIVEN PUBLIC DISTRIBUTION

ABSTRACT

In measurements of the changing electrical properties of semiconductors during neutron bombardment in the nuclear reactor, it is desirable to use automatic recording methods whenever possible. A device has been constructed and is currently being used which fulfills the requirements of the semiconductors under consideration. The components are a 0- to 3-mv 12-point Brown Electronik recorder with a 4-pole 12-position circuit-selector switch ganged to the Brown input-selector switch; a system of limit switches which activate appropriate stepping relays for automatic circuit changes; a system of scale indication; a Vibrating Reed Electrometer for high-resistance measurements; and constant-current, constant-voltage, and variable-power supplies.

By means of the limit switches and relays, proper scale and circuit changes can be made to keep the data within the range of the recorder and provide a linear plot for changes up to 12 orders of magnitude.

Each major component is connected to a needle-plug terminal board so that any circuit within the range of the available components can be readily employed.

By means of the circuit-selector switch ganged with the recorder input switch the external circuit can be changed for each point.

This instrument is currently being used to measure the resistivity of germanium, silicon, and cuprous oxide during neutron bombardment and can also be used to measure static characteristics of semiconductor circuit components.

AN AUTOMATIC MULTIRANGE RECORDING DEVICE FOR MEASURING VARYING POTENTIALS

J. C. Pigg

INTRODUCTION

In the study of the electrical properties of semiconductors, it is desirable to record automatically the temperature and resistivity of the sample as a function of time. The record includes the output voltage of a thermocouple, the potential drop across a fixed portion of the sample, the current as determined by the potential drop across a standard resistor, and such other voltages as may be required to indicate the condition of the system under observation.

The resistance of a semiconductor under bombardment may change by a few per cent in time periods of several days as in the case of low-resistivity p-type germanium, or it may change several orders of magnitude in a few hours as in the case of silicon and cuprous oxide. The instrument must therefore (1) be capable of measuring and recording directly the current and voltage applied to samples that vary in resistance from 0.001 ohm to 100 megohms to within a desired accuracy of $\pm 0.1\%$ and automatically making the proper scale changes, (2) be able to record the temperature and automatically reverse the thermocouple input if the sample temperature should change from below to above $0^{\circ}C$ or vice versa, and (3) when used with nonohmic samples, e.g., rectifiers, the instrument must be able to hold the current or voltage constant at predetermined values.

The instrument to be described in this paper consists of a multipoint-potentiometer strip-chart recorder, the necessary current and voltage control circuits, an essentially infinite impedance voltage measuring device, the necessary automatic switching and scale changing circuits, and a system of component

terminals which facilitates the use of those components necessary for a given circuit.

THE RECORDER

The basic unit is a modified 12-point Brown Electronik strip-chart recorder of the potentiometer type employing a 0- to 3-mv scale. The 0- to 3-mv scale was chosen in order to obtain the greatest accuracy possible with this type of recorder in the measurement of the sample temperature. Three millivolts is the maximum magnitude of the voltage from a copper-constantan thermocouple for temperature ranges normally encountered in these investigations.

The modifications to the recorder consist of (1) careful shielding from stray pickup, (2) increasing the input impedance and sensitivity of the amplifier, (3) provision for high-impedance preamplification, (4) the addition of limit switches, (5) the addition of a circuit-selector switch mechanically coupled with the Brown printing wheel and input-selector switch, (6) the installation of a direct-reading scale indicator, and (7) installation of a helical slide-wire in addition to the straight slide-wire.

All the wiring inside the recorder is carefully shielded including not only the d-c leads of the sample and balance circuits but also the a-c wiring such as motor- and chart-light leads. Although a-c pickup is not amplified and cannot in itself affect the balance position of the recorder, it does overload the input stages of the amplifier. The effect of a-c pickup is to cause a large insensitive region near the balance position and to decrease the torque of the balance motor.

The change from a normal to a high-gain amplifier is a standard field

modification. Figure 1 shows the modified amplifier and the balance circuit.[1] The Brown amplifier now employed is designated as model 13-R-23. Standard parts are used except for the input filter capacitor and input transformer. The input filter capacitor is decreased to 50 μf. It is a low voltage, dry electrolytic capacitor that is specially constructed to have a negligible residual voltage to avoid any "battery"-type effects. The input transformer is constructed so that the primary and secondary are electrostatically shielded from each other, and thus it cannot be replaced by the usual commercial transformer. The input capacitor and input transformer are obtainable from the manufacturer of the recorder.

High-impedance preamplification for the recorder amplifier is available in two ways. A preamplifier designed by J. L. Horton of the Instrument Division of the Oak Ridge National Laboratory for use with the Brown amplifier in polarograph work (Fig. 2) is adequate for use with samples of less than 10-megohms resistance. This preamplifier can be placed in the circuit by connecting the input lugs to the Brown terminal board, removing the converter and input tube from the Brown amplifier, and plugging the preamplifier output into the plug installed on the Brown amplifier chassis for this purpose.

In addition to the preamplifier being readily installed or removed from the circuit, it has the advantage of operating on the same magnitude of voltage as the recorder, and thus additional switching is unnecessary. It has the disadvantage that the low-impedance balancing circuit of the recorder is in the high-resistance sample circuit while balancing.

Preamplification can also be obtained by using a Vibrating Reed Electrome-

(1) Minneapolis Honeywell Service Manual 15019-M, Sec. 1550.

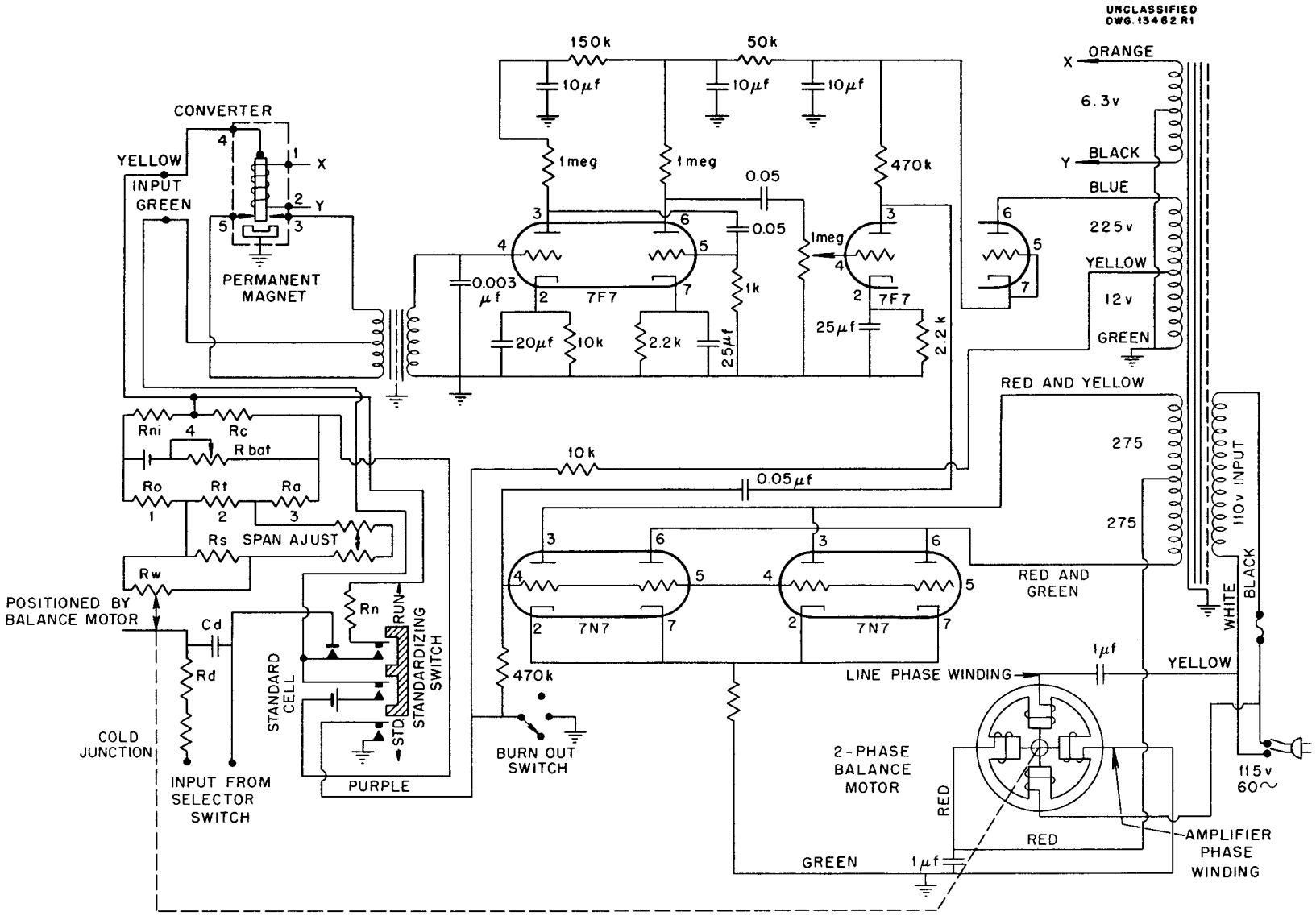

Fig. 1 Modified Amplifier and Balance Circuit

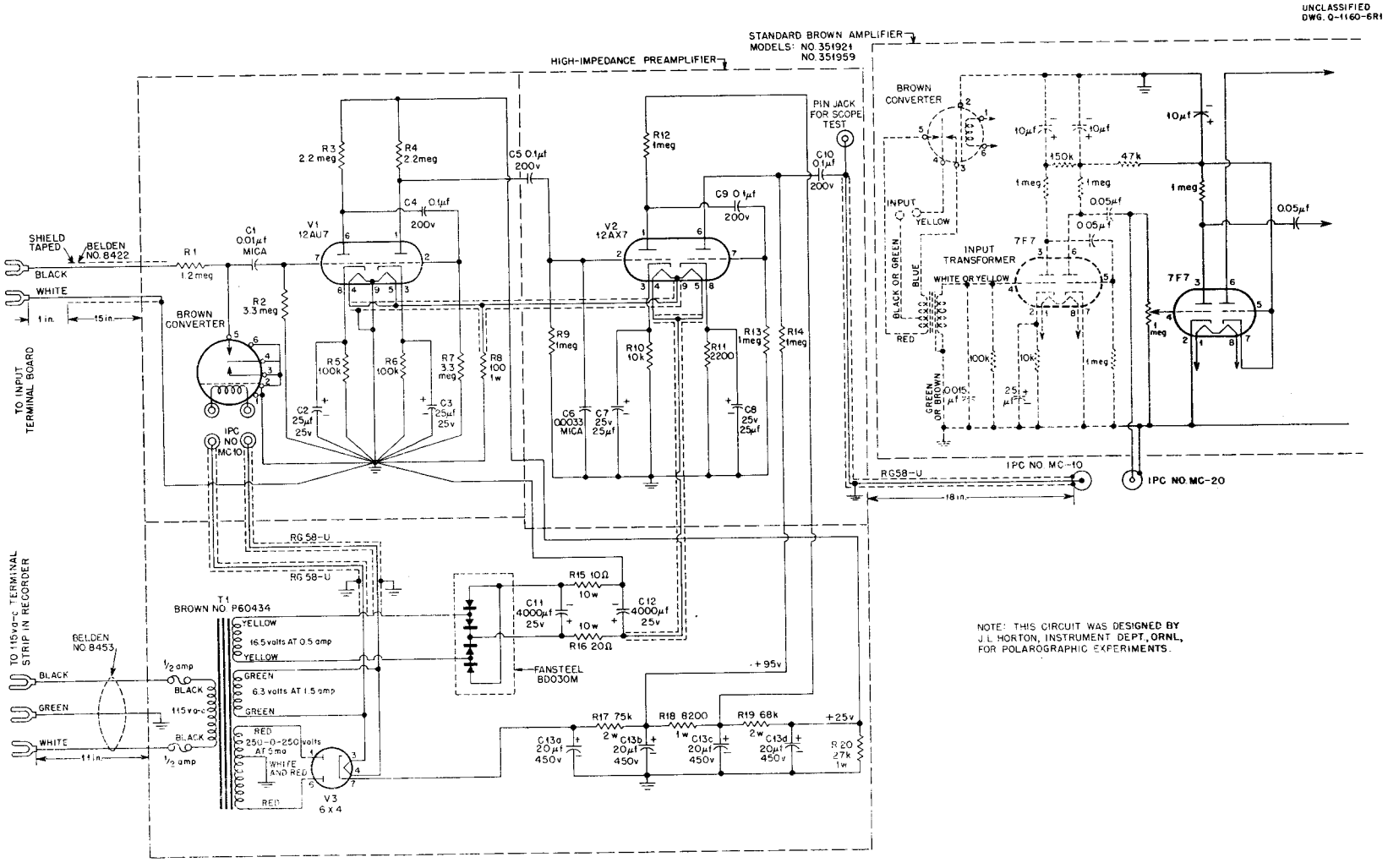

Fig. 2 Brown High-Impedance Preamplifier Circuit

ter[2] as a voltage measuring device and using the output of the Vibrating Reed Electrometer as the input to the Brown recorder. The Vibrating Reed Electrometer is sufficiently stable for such application only when used on the 1- or 0.1-v scale; thus in order to record both the voltages from the sample circuit and the voltage from the thermocouple, additional switching is required.

The use of the Vibrating Reed Electrometer has the advantage of placing the Brown balancing circuit in a low-impedance circuit and continually presenting a high impedance to the high-resistance sample circuit. The limit of the resistance of samples that can be studied with the use of the Vibrating Reed Electrometer is determined by the insulation resistance of the sample circuit.

The circuit-selector switch is made up of three Leeds & Northrup 12-point recorder input switches that have been dismantled and reassembled as one 6-pole 12-position switch. The circuit-selector switch is mounted on a bracket installed just behind the Brown input-selector switch. The input-selector and circuit-selector switches are mechanically coupled by a gear train having a 1:1 ratio. All points on the circuit-selector switch lead to the main instrument terminal board (see subsequent section).

Addition of the limit switches is a standard field modification. The necessary components are obtainable from the manufacturer of the recorder. Each limit switch consists of two mercury switches that are independently adjustable. This makes available two limit switches at each end of the recorder scale.

The Vibrating Reed Electrometer input is 0 to 1 v but the data is recorded as 0 to 3 millivolts. The sample temperature is recorded in terms of voltage.

---

(2) H. Palevsky, R. K. Swank, and R. Grenchik, "Design of Dynamic Condenser Electrometers," Rev. Sci. Instr. 18, 298-314 (1947).

The current through the sample is recorded as the voltage developed across a standard resistor. The value of the standard resistor used for current measurement is also recorded as a voltage (see section following). To aid in interpreting the data, a plastic overlay scale (Fig. 3) has been installed in place of the glass bar that is normally employed to hold the chart in position. The scale contains the appropriate markings to enable a quick visual evaluation of the data. This is particularly useful when setting up an experiment.

UNCLASSIFIED
DWG. 13791

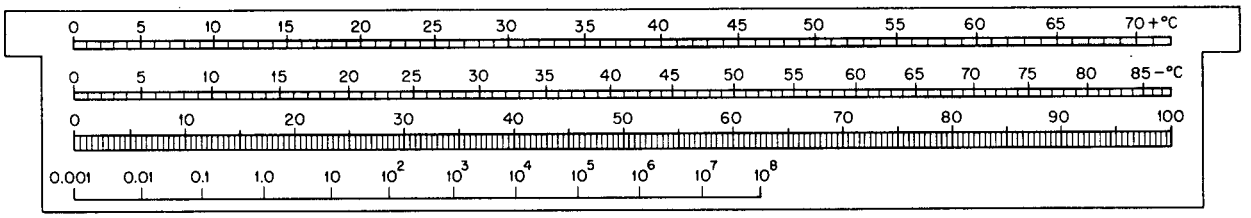

Fig. 3 Chart Overlay Scale

The helical slide-wire used with the circuit-selector switch becomes a potentiometer that provides a variable resistance, or a voltage corresponding to the position of the print wheel. Thus, when the instrument is at balance, the voltage output from the helical slide-wire corresponds to the voltage input to the recorder. The helical slide-wire can then be used as a source of information for another recorder, control circuit, or a computing mechanism.

HAND-CONTROLLED COMPONENTS

For slowly changing samples it is possible to use hand-controlled components to provide power control or to serve as standard resistors for current measurement (Fig. 4). It is necessary to shield these components, and for this reason they are mounted in the control and indicator cabinet. Each component

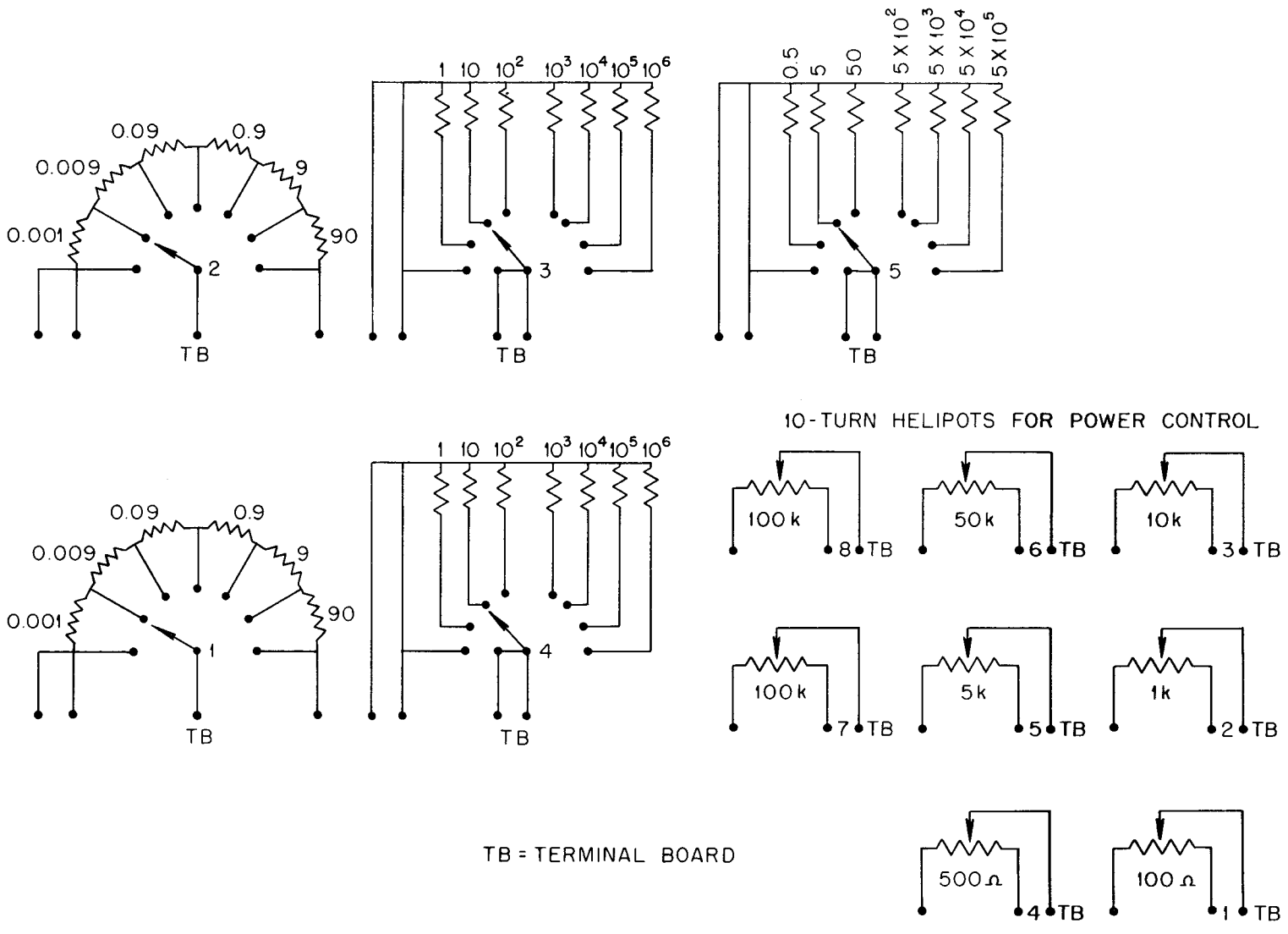

Fig. 4 Hand-Controlled Components

is individually terminated at the terminal board so that it may be employed in any desired manner.

RELAYS

Automatic scale changing is accomplished by stepping switches[3] operated by double-acting rotary solenoids, which are energized through the limit and circuit-selector switches. Figure 5 shows schematically the two types of relays used. The solenoids are designated CW and CCW. The poles of the switches and circuit networks are indicated in block diagram. Whenever a point on the recorder reads too high or too low, the respective limit switch is closed. The position of the circuit-selector switch selects the proper relay, and the relay is actuated to change the circuit to bring the data back on scale.

When the relay acts, a resistance is automatically inserted in series with the solenoid, thus decreasing the current in the solenoid so that the relay returns to its unenergized position. If the limit switch is still closed, the relay acts again. In this way the relay continues to act until the data is brought back on scale. This feature is important when changes greater than one order of magnitude are required.

Relay I is the type used for current measurement. The current leads to the standard resistors are connected through poles 1 and 4. The potential developed across the resistors is read by leads connected through poles 2 and 3. All points of pole 5 lead to the terminal board and are available for any desired circuit.

---

(3) These switches are designed for this type of operation and are rated as follows: (a) dielectric strength between points and to ground greater than 500-v rms; (b) continuous current capacity 5 amp; (c) thermal emf less than 1μv; (d) contact resistance less than 0.001 ohm; (e) insulation resistance of the order of 10^6 megohms.

UNCLASSIFIED
DWG. 12385-AR1

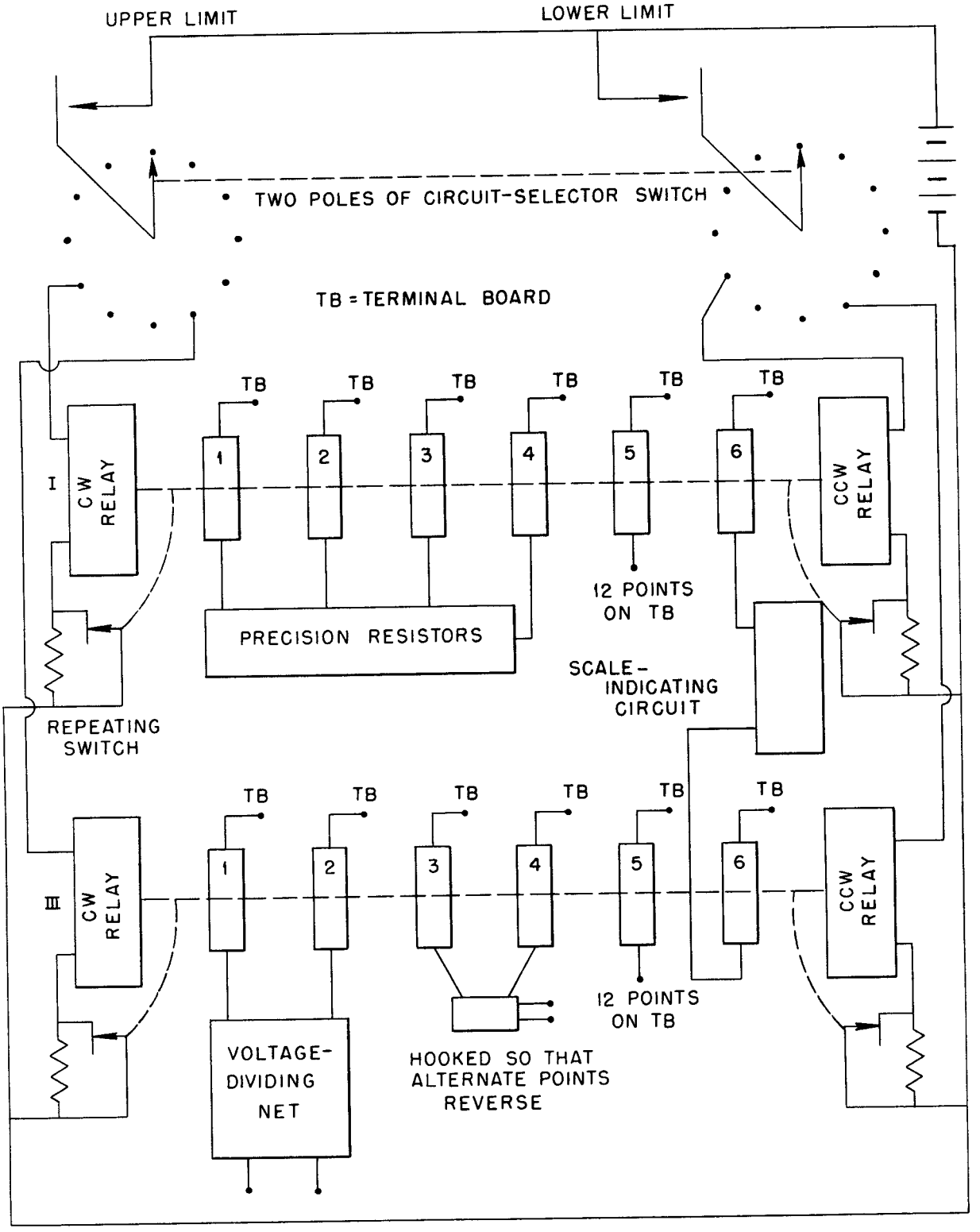

Fig. 5 Block Diagram of Limit Switch and Relay Hookup for Two Typical Relays

Pole 6 is used to select a voltage that is used to record the position of the switch. Relay III differs from relay I in that poles 1 and 2 select positions in a potential-divider circuit, whereas poles 3 and 4 are used as automatic reversing switches.

POWER SUPPLIES

For experiments in which the resistance changes slowly and the sample is expected to be ohmic, helipots and standard resistors are provided so that the power control units need not be employed (Fig. 4). For ohmic samples that have large changes in resistance, a resistor bank can be connected to pole 5 of any unused relay so that the resistance in series with the sample may be varied to keep the voltage reading on scale (Fig.6). The resistances are varied in approximately one-half order of magnitude steps. This is necessary to prevent hunting between the power-control relay and the relay controlling the selection of the standard resistance used for current measurement.

For samples with resistance below 1 megohm that require constant current a supply is used that was designed and constructed (Fig. 7) by M. R. Smith and F. W. Manning of the Instrument Department of the Oak Ridge National Laboratory. The current is controlled by controlling the voltage across a resistor in series with the sample. It may be used as a constant-voltage source for samples such as commercial rectifiers in which the end effects of the sample can be neglected.

A power supply (Fig. 8) constructed by B. M. Hilderbrant, also of the Instrument Department, is used for samples with resistance below 10 megohms. This supply can hold a predetermined voltage across the sample voltage terminals or can hold a constant current through the sample by controlling the voltage across a resistor that is in series with the sample. This supply is capable of furnishing a set of predetermined voltages.

UNCLASSIFIED
DWG. 12386-AR1

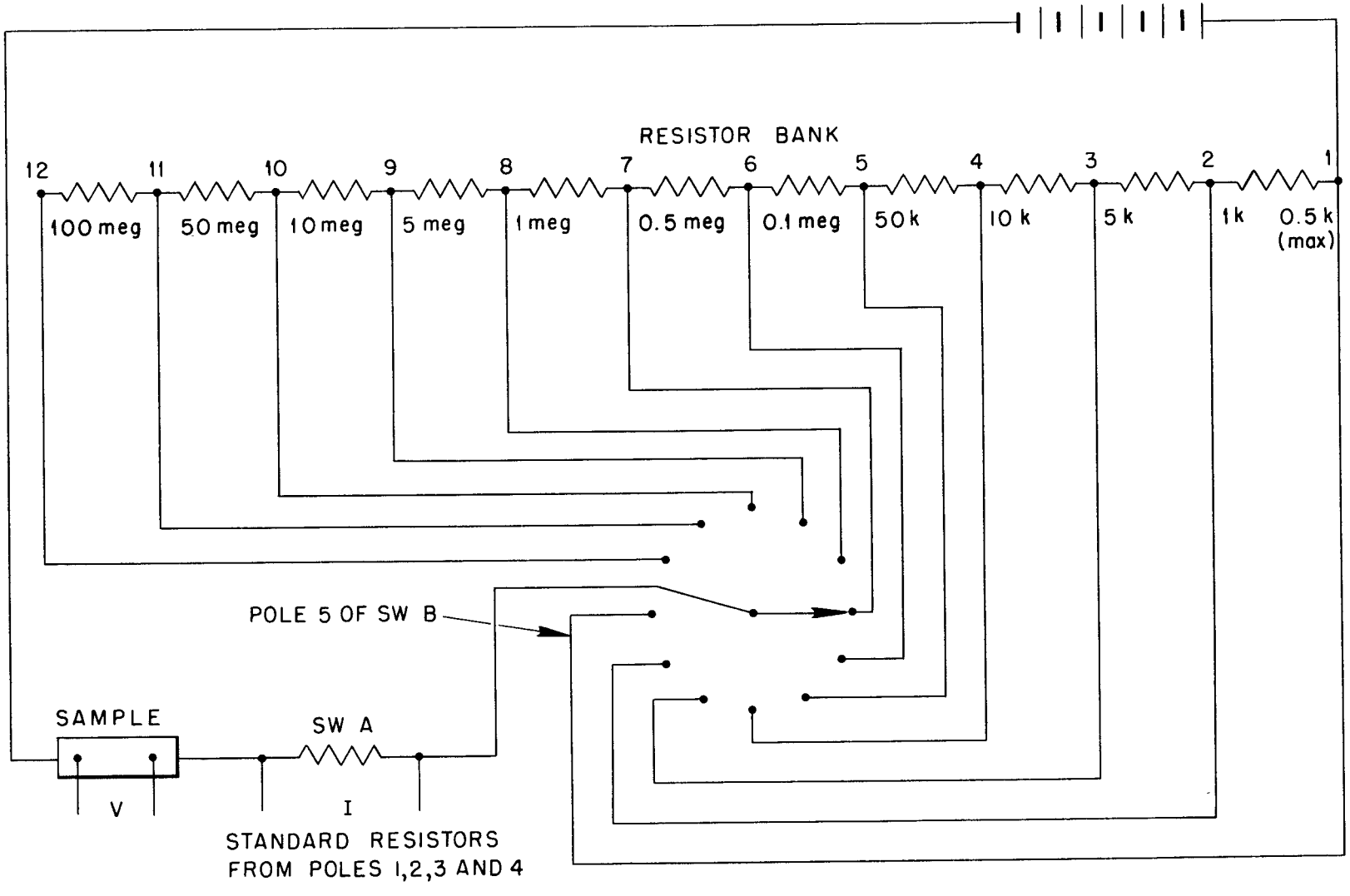

Fig. 6 Power Supply for an Ohmic Sample

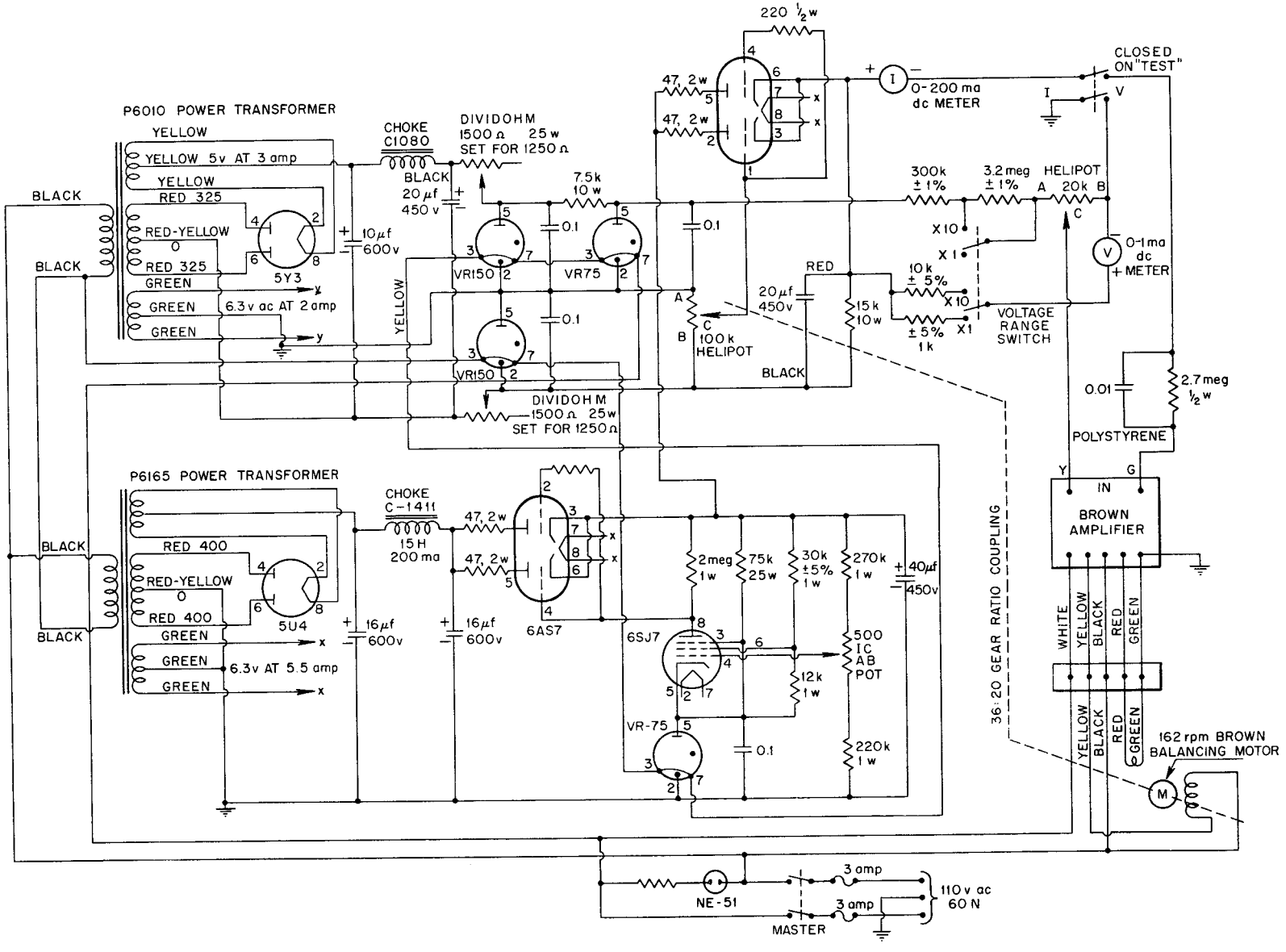

Fig. 7 Regulated Power Supply, Q-998, 0.1 -10.0 v dc at 0-200 ma

UNCLASSIFIED
DWG. 13458R1

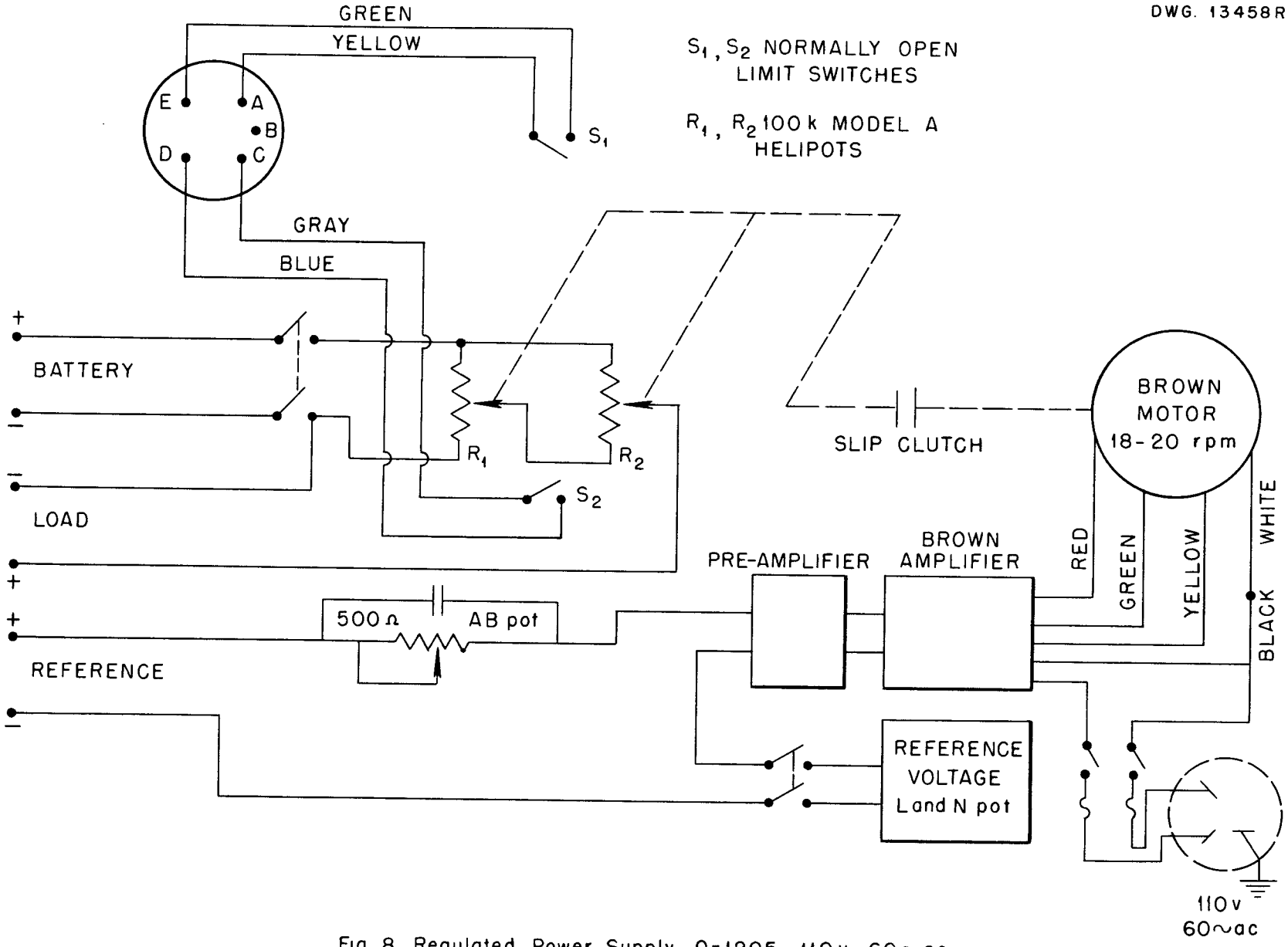

Fig. 8 Regulated Power Supply, Q-1205, 110 v 60~ac

For samples with a resistance above 1 megohm, a power supply capable of either constant voltage or constant current is used (Fig. 9). This power supply was also designed and constructed by B. M. Hilderbrant. Since it is used with high resistances, insulation and shielding were given particular consideration. The amplifier circuit and current circuits are entirely insulated from ground by at least 1 in. of Teflon. All wiring external to the shield is RG62U coaxial cable. The amplifier is connected to the power-control circuit by a beam of light, thus providing good insulation. The ground for the control circuit is provided by the voltage-measuring circuit.

APPLICATIONS

This system is applicable to many types of voltage control and measurement problems. A few are presented to illustrate the manner in which the instrument is being used.

The most simple type of circuit is that involved in the study of a slowly changing low-resistance ohmic sample. Figure 10 shows such a circuit with the possible power supplies indicated by dotted lines. The current is read by recording the voltage developed across a standard resistor R_i. The voltage developed across a fixed portion of the sample is read directly. The temperature is recorded as the voltage from the thermocouple.

If no power control is necessary, a battery with a series dropping resistance R_d may be employed. If power control is necessary, the constant-voltage or constant-current supplies may be hooked into the circuit.

There is no need for the circuit-selector switch or the relays in such an experiment. Such samples may be studied concurrently with other samples whenever free points are available on the recorder.

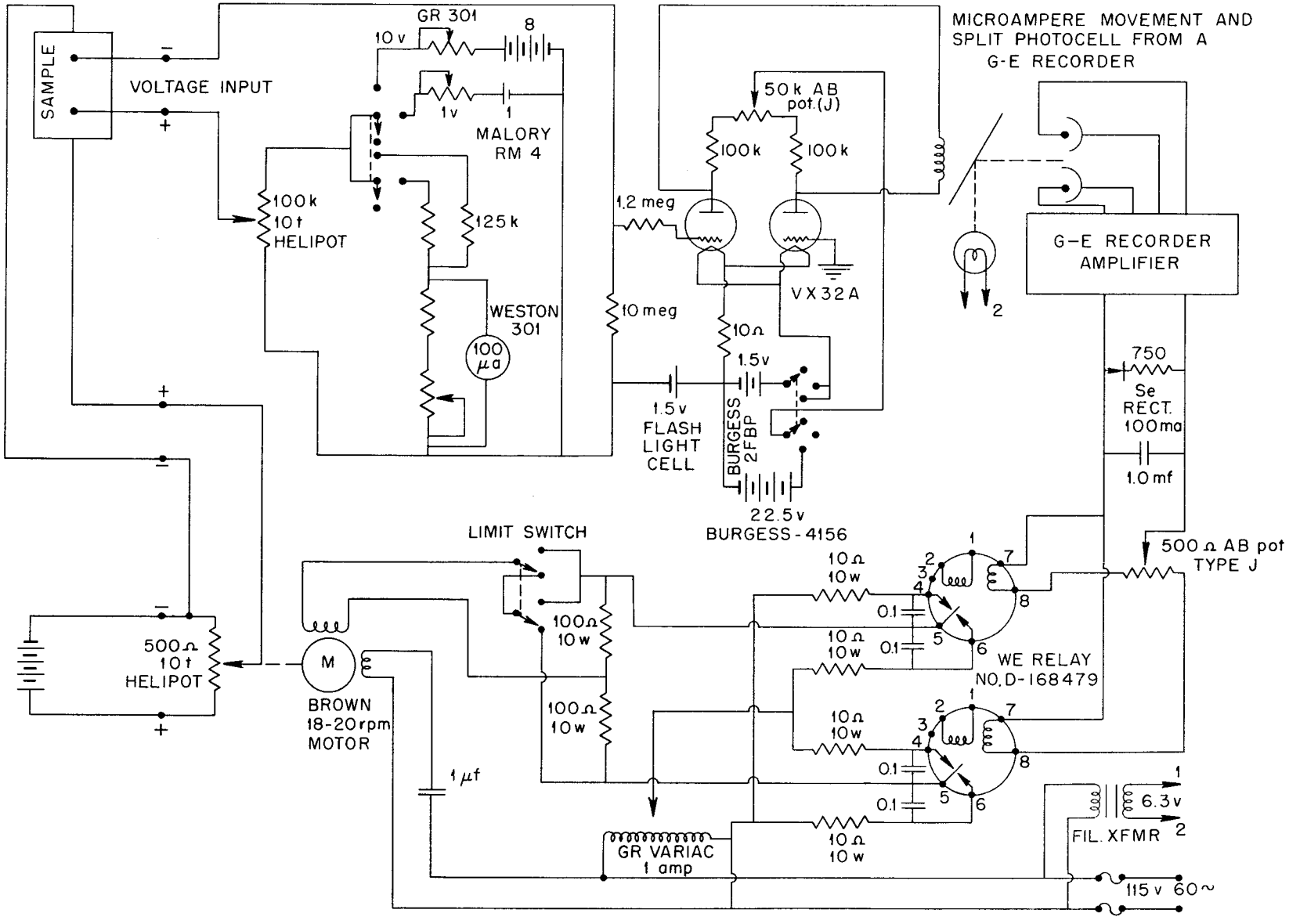

Fig. 9 Regulated Power Supply, Q-1104, 115v 60~ac

UNCLASSIFIED
DWG. 12387R1

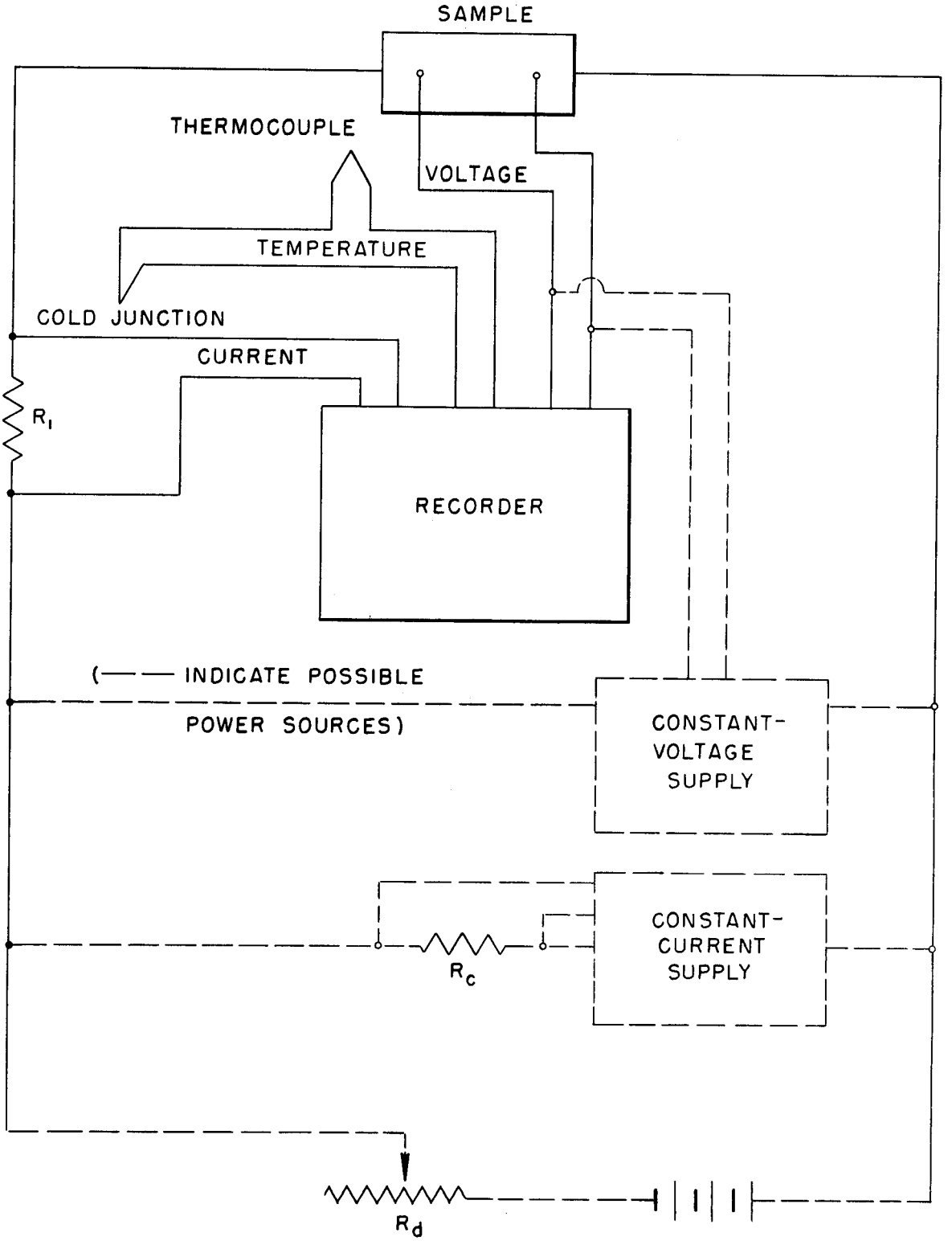

Fig. 10 Circuit for a Slowly Changing Sample

Figure 11 shows typical circuitry for samples with resistance changes of several orders of magnitude. For simplicity only five points of the relay switches are shown. The relay poles (1 and 4, 2 and 3) correspond to relay I of Fig. 1. The alternate power supplies are not shown. The dropping resistance in series with the battery is varied by means of limit switches and a relay in order to keep the voltage on scale. The standard resistances across which the current is read can also be varied by means of a relay to provide for automatic scale changing. Pole 6 of the relay selects a voltage from a scale circuit, and the voltage is printed to record the position of the switch.

An offset voltage is applied to the point preceding the series of points that are used for recording the data, and thus spurious tripping of the relays is prevented.

The circuit-selector switch is used to select the input to the Vibrating Reed Electrometer and to select the points on which the relays will be actuated. The output of the Vibrating Reed Electrometer and all other voltages are then applied to the recorder through the recorder input switch.

The simplest use with a nonohmic sample is the circuit for studying a rectifier. Figure 12 shows a schematic circuit of this type. Again, only five points are shown on the switches for simplicity. The current scale, scale indicator, temperature, voltage, and current measurements are the same as shown in Fig. 11. By means of relays R_3 and R_4, the sample leads are reversed each cycle of the recorder. The voltage-controlled power supply can provide a different voltage for each recorder point. By monitoring the voltage and reading the scale indicator for every other current point, and recording temperature once each cycle, six points of the rectifier curve can be followed for both directions of the

UNCLASSIFIED
DWG. 12388-AR1

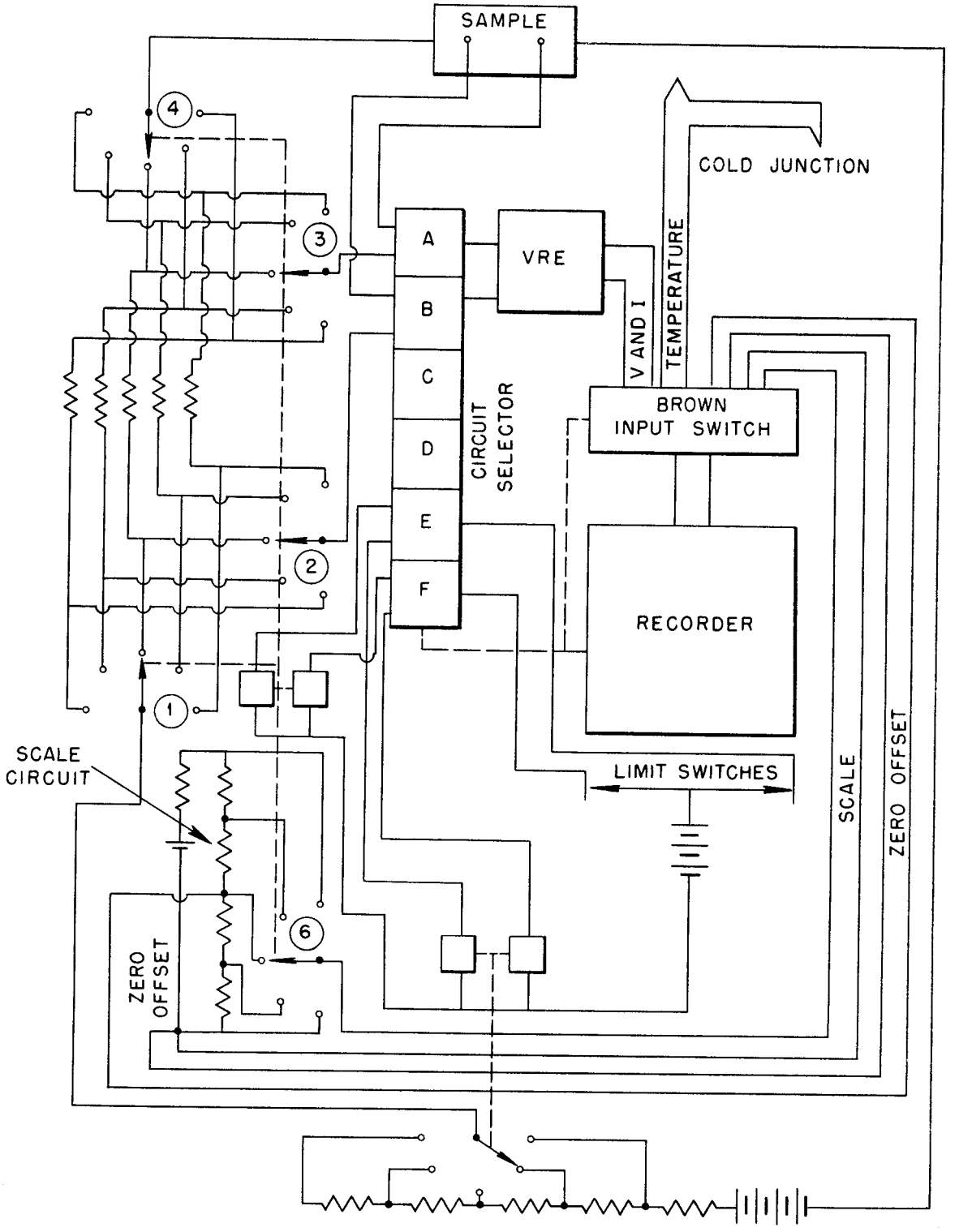

Fig. 11 Schematic Diagram of Ohmic-Sample Hookup for Large R Changes

UNCLASSIFIED
DWG. 12389R1

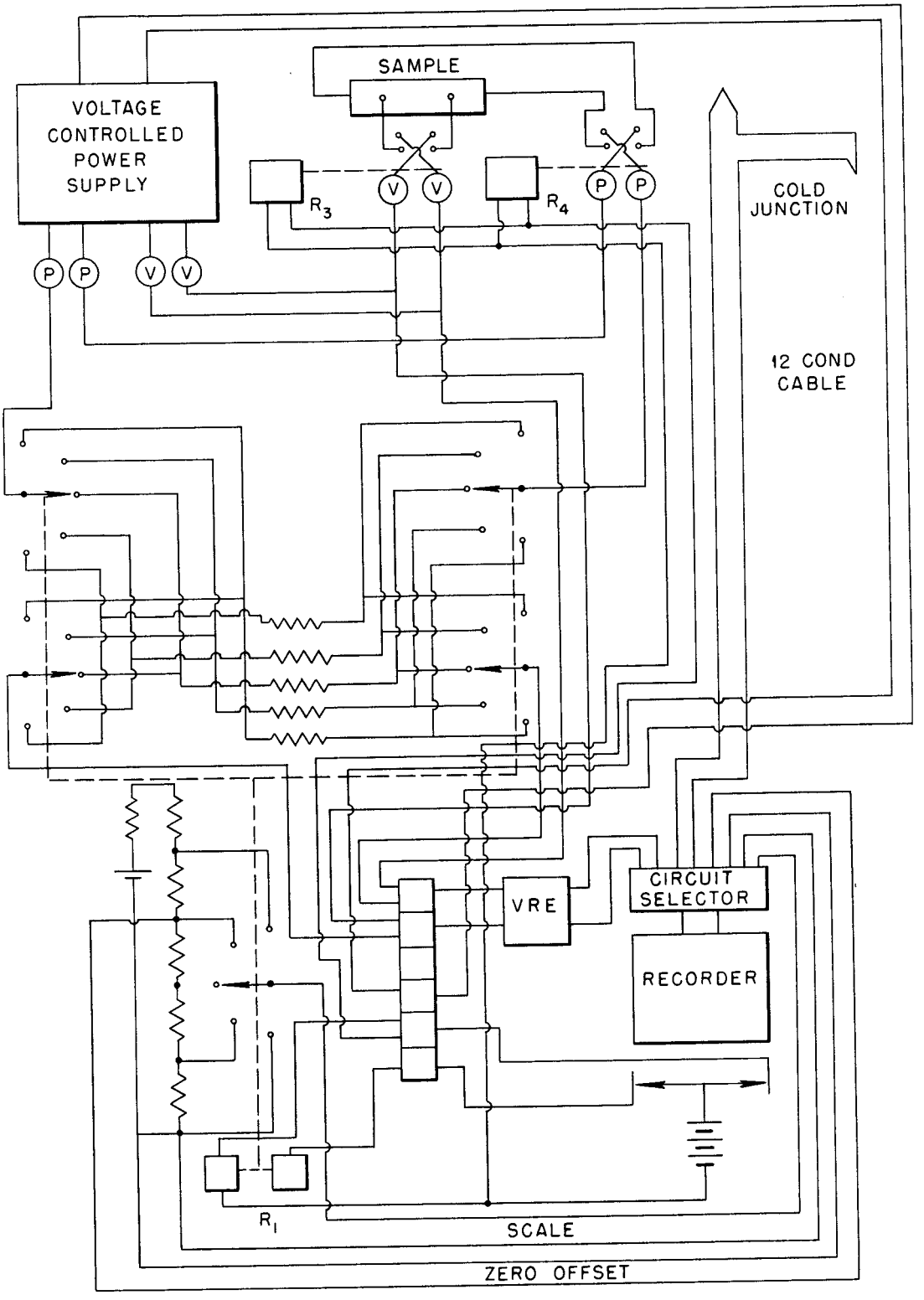

Fig. 12. Circuit for Studying Rectifiers

rectifier, giving a complete characteristic curve about once every 2 minutes. The instrument can be used in a similar manner to study other components such as transistors, photo-cells, or vacuum tubes.

By proper adjustment of the limit switches and use of the circuit-selector switch, the recorder can also serve as a control device. For example, the limit switches can actuate a relay that changes the current in a heater or actuates a valve to add liquid nitrogen to a Dewar and thus gives some temperature control.

Using the limit switches and circuit-selector switch in connection with the upscale burnout feature of the amplifier,[1] an alarm can be actuated to summon aid in case of a circuit failure in the instrument. The same alarm can be actuated in the limiting position of the scale-changing relays and thus call attention to the fact that the limit of the instrument has been reached.

TERMINAL BOARD

Figure 13 shows the layout of the terminal board. The terminals are female Birnbach needle connectors, which have the advantage of being available in an assortment of colors so that the different groups and key terminals can be readily detected from the color pattern of the terminal board.

The terminals for the hand-controlled elements are located across the first four rows. The first five columns of this group are the terminals for the standard resistors used for current measurement. The next six columns are terminals for the helipots that are used for current control (see Fig. 4). A schematic sketch on the terminal board indicates the point on the resistor to which the terminal is connected. For example, the terminal in the first row, first column, is a current lead for standard resistor switch No. 1. The sixth column of the first four rows is the slide on helipots 3, 2, 1, and 7, respectively.

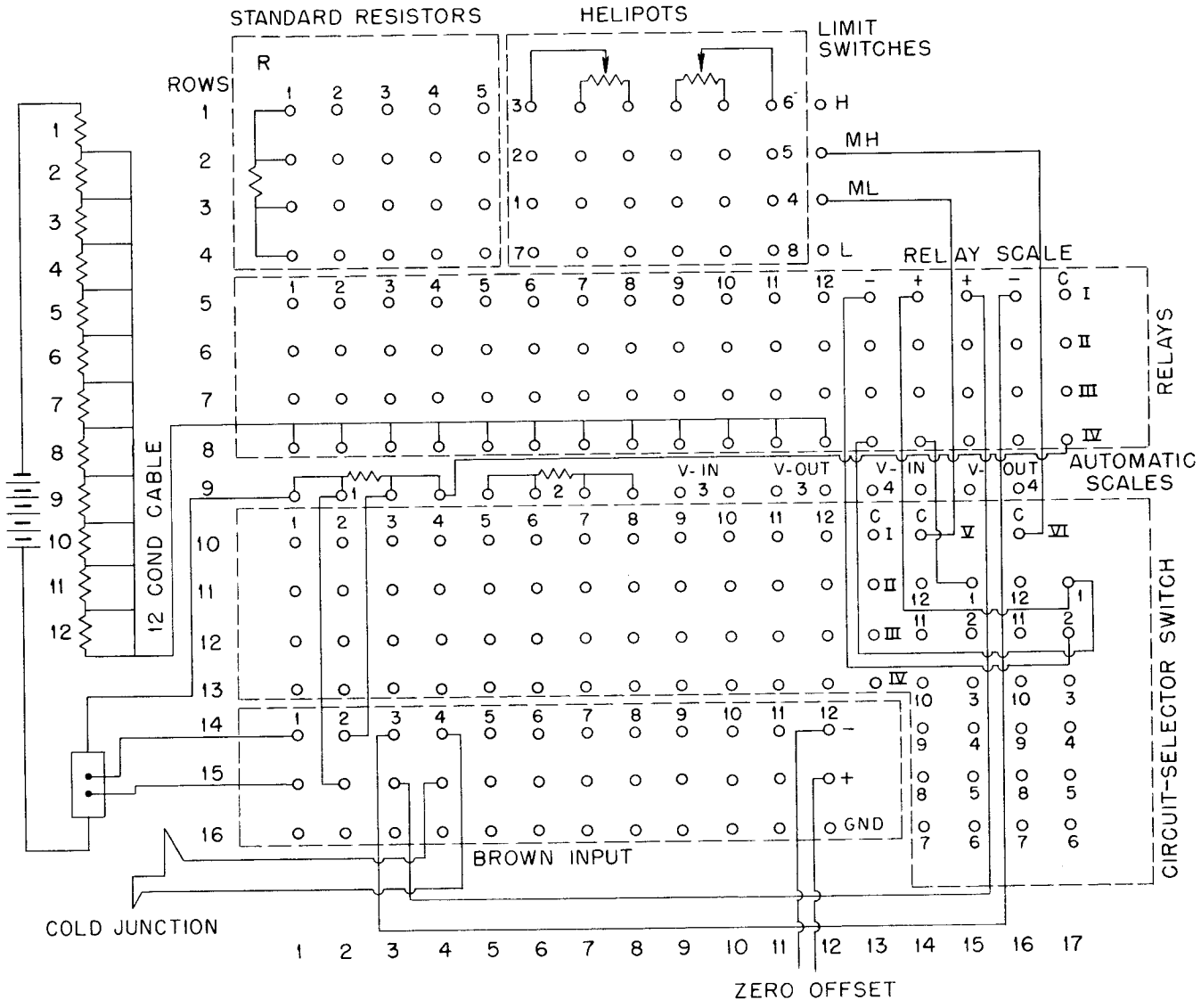

Fig. 13 Terminal Board

The twelfth column of the first four rows is used with the limit switches. The letters H, MH, ML, and L indicate high, medium high, medium low, and low.

The limit switch ML is set at 0.25 mv and the limit switch MH at 2.9 millivolts. These are the limit switches most frequently used. H and L are usually set at the extreme limits and are used, for example, for reversal of thermocouple leads.

The next five rows on the terminal board are used with the four relays. In rows 5, 6, 7, and 8 of columns 1 to 12 are the terminals of the No. 5 poles of the four relay switches (see Fig. 5). In column 17 of rows 5, 6, 7, and 8 are the common or center terminals of the No. 5 poles of the four relay switches. In columns 13 and 14 of rows 5, 6, 7, and 8 are the terminals of the relay solenoids. Column 13 (marked -) contains the terminals for the solenoids that rotate the switches in such a manner as to decrease the magnitude of the components selected by the switches. If the switch is in position 5 and current is sent through the solenoid connected to the terminal in column 13, the relay will move the switch to position 4. In like manner, column 14 (marked +) contains the terminals for the solenoids that rotate the switches so as to increase the magnitude of the components selected by the switches. In columns 15 and 16 are the terminals of the No. 6 poles of the various relays. A voltage is available at these terminals to indicate the position of the respective switch.

Row 9 contains the terminals of poles 1, 2, 3, and 4 of relays I and II, and poles 1 and 2 of relays III and IV. These are the automatic scales of the instrument (Fig. 5). In row 9 of columns 1, 2, 3, and 4 are poles 1, 2, 3, and 4 of relay I; in columns 5, 6, 7, and 8 are poles 1, 2, 3, and 4 of relay II, respectively. In columns 9, 10, 11, and 12 of row 9 are the terminals of poles 1 and 2 of relay III, which are used as indicated in Figs. 5 and 13. In the same

manner, columns 13, 14, 15, and 16 contain the terminals of poles 1 and 2 of relay IV.

In columns 14, 15, 16, and 17 of rows 10 through 16 are poles V and VI of the circuit-selector switch. They are used exclusively with the limit switches. In this way, damage caused by an occasional arc will not damage the poles of the circuit-selector switch that are to be used for voltage measurement. Such arcs will produce no harmful results in the limit-switch circuits but might produce damage to the contacts or insulation that would be serious in low-voltage high-resistance circuits. The terminals of pole VI are red, whereas those of pole V are green. Pole IV is used with the MH limit, and pole V is used with the ML limit. The color coding aids in hookup by making the terminals stand out visually and thus provides a marked contrast between the two poles.

In rows 10, 11, 12, and 13 of columns 1 through 13 are poles 1, 2, 3, and 4, respectively, of the circuit-selector switch. Poles 1 and 2 are used exclusively for circuits with low current and voltages below 1 volt. These poles are used as the input-selector switch for the Vibrating Reed Electrometer and other uses where there is no danger of arcing.

Poles 3 and 4 are used for control purposes or with the auxiliary slide-wire. An example of use of poles 3 and 4 for control purposes is the circuit for measuring a rectifier, or any circuit in which the circuit parameters must be different for different points on the recorder.

In columns 1 through 12 of rows 14 and 15 are the negative and positive leads, respectively, to the positions of the Brown input-selector switch. In columns 1 through 12 of row 16 are terminals leading to the common instrument ground.

The use of the terminal board is illustrated in Fig. 13 by showing how the terminals are connected for a sample that will require scale changing. The circuit is shown in Fig. 14. Only five positions of the switches are shown for simplicity.

Figure 15 shows one of two auxiliary terminal boards. The knob for the 500-ohm potentiometer and the terminals of the resistor bank (Fig. 6) are the same in both terminal boards. The auxiliary slide-wire has terminals on each board. The terminal board not shown differs from the one shown in that the reversing switch terminals are for relay IV and the auxiliary scale-indicator terminals are for relays III and IV.

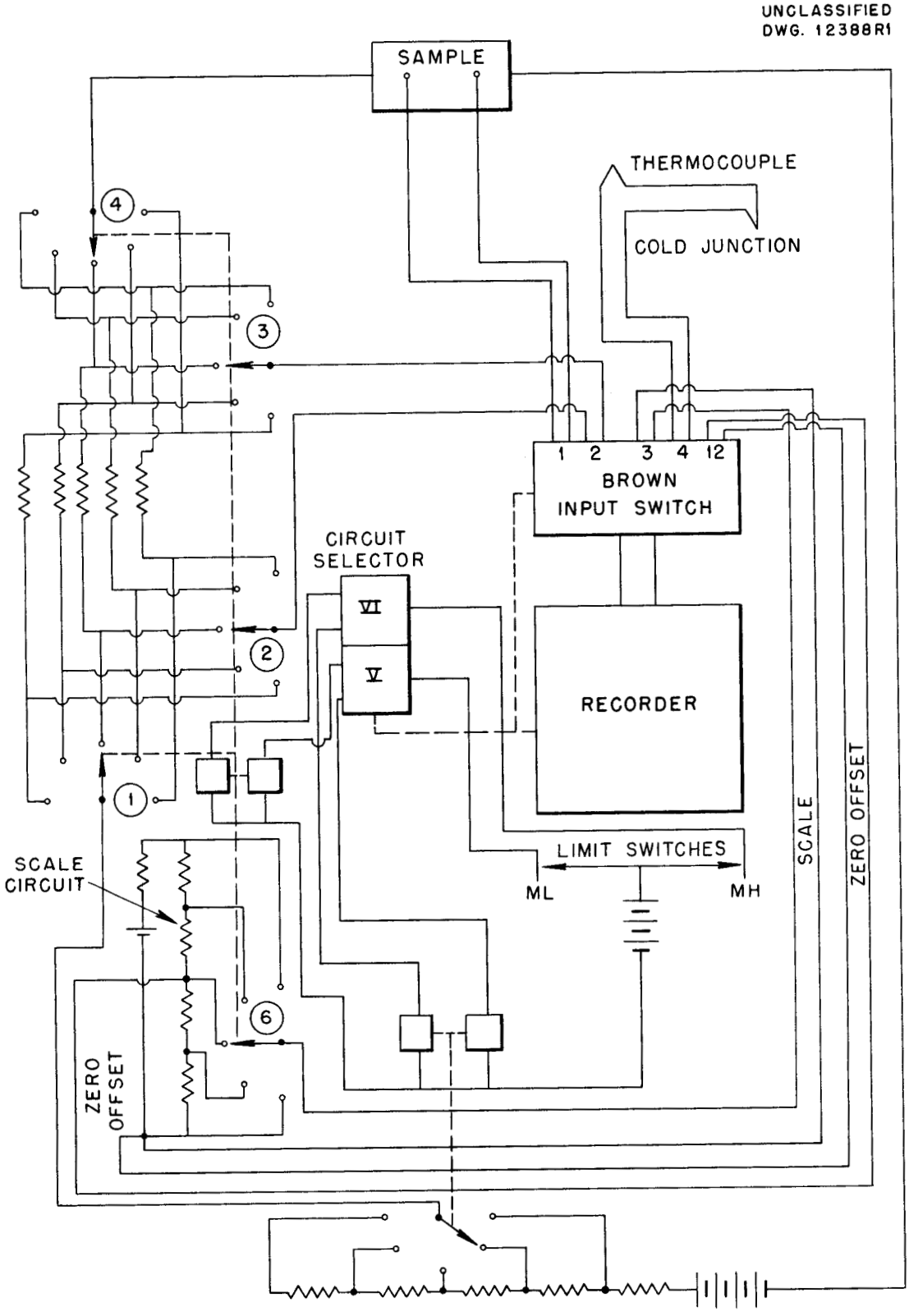

Fig. 14. Schematic Diagram of Terminal Board Circuit

UNCLASSIFIED
DWG. 13457R1

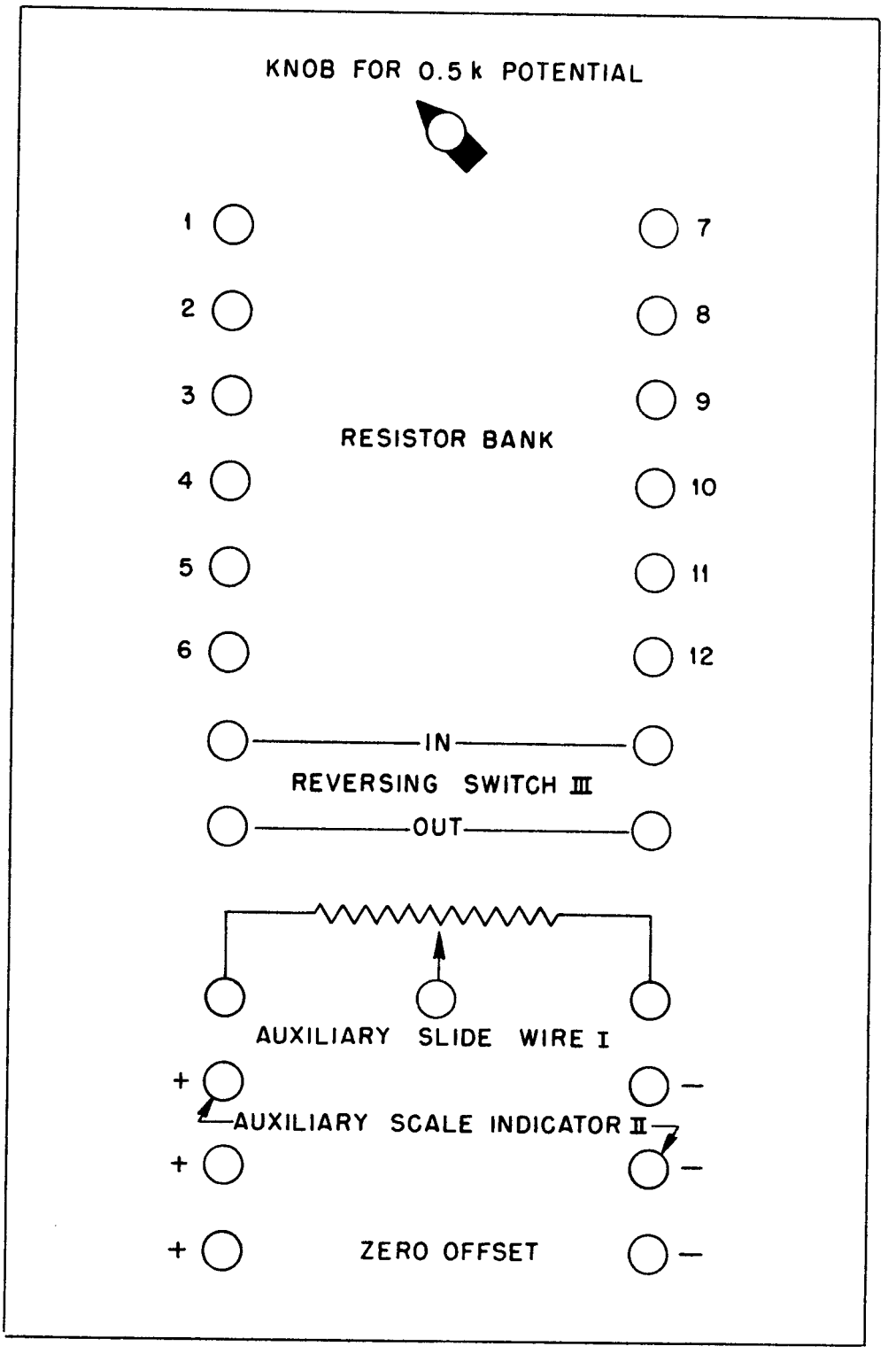

Fig. 15. Auxiliary Terminal Board