Library

MARTIN MARIETTA ENERGY SYSTEMS LIBRARIES
3 4456 0251723 9

ORNL-1353
Progress

HEALTH PHYSICS DIVISION

PROGRESS REPORT

FOR PERIOD JANUARY 20, 1952 TO JULY 20, 1952

OAK RIDGE NATIONAL LABORATORY
CENTRAL RESEARCH LIBRARY
DOCUMENT COLLECTION
LIBRARY LOAN COPY
DO NOT TRANSFER TO ANOTHER PERSON
If you wish someone else to see this document, send in name with document and the library will arrange a loan.
UCN-7969
(3 3-67)

OAK RIDGE NATIONAL LABORATORY
OPERATED BY
CARBIDE AND CARBON CHEMICALS COMPANY
A DIVISION OF UNION CARBIDE AND CARBON CORPORATION
UCC
POST OFFICE BOX P
OAK RIDGE, TENNESSEE

ORNL-1353
This document consists of 30 pages.
Copy 8 of 315 copies. Series A.

Contract No. W-7405-eng-26

HEALTH PHYSICS DIVISION

PROGRESS REPORT

For Period January 20, 1952 to July 20, 1952

K. Z. Morgan, Director

DATE ISSUED:

SEP 22 1952

MARTIN MARIETTA ENERGY SYSTEMS LIBRARIES

3 4456 0251723 9

OAK RIDGE NATIONAL LABORATORY
operated by
CARBIDE AND CARBON CHEMICALS COMPANY
A Division of Union Carbide and Carbon Corporation
Post Office Box P
Oak Ridge, Tennessee

INTERNAL DISTRIBUTION:

1. G. T. Felbeck (C&CCC)
2-3. Chemistry Library
4. Physics Library
5. Biology Library
6. Health Physics Library
7. Metallurgy Library
8-9. Training School Library
10. Reactor Experimental Engineering Library
11-14. Central Files
15. C. E. Center
16. C. E. Larson
17. W. B. Humes (K-25)
18. L. B. Emlet (Y-12)
19. A. M. Weinberg
20. J. A. Swartout
21. E. D. Shipley
22. E. J. Murphy
23. F. C. VonderLage
24. K. Z. Morgan
25. S. C. Lind
26. A. S. Householder
27. C. S. Harrill
28. C. E. Winters
29. A. H. Snell
30. E. H. Taylor
31. R. C. Briant
32. J. S. Felton
33. A. Hollaender
34. F. L. Steahly
35. D. W. Cardwell
36. E. M. King
37. M. T. Kelley
38. E. E. Anderson
39. R. S. Livingston
40. C. P. Keim
41. G. H. Clewett
42. C. D. Susano
43. L. B. Farabee
44. F. J. Davis
45. R. J. Morton
46. C. E. Haynes
47. Hugh F. Henry (K-25)
48. E. G. Struxness (Y-12)
49. W. E. Cohn
50. H. H. Hubbell
51. H. K. Richards
52. J. Neufeld
53. D. D. Cowen
54. P. M. Reyling
55. M. J. Skinner
56. J. C. Hart
57. T. H. J. Burnett
58. W. J. Lacy
59. L. A. Krumholz
60. G. S. Hurst

EXTERNAL DISTRIBUTION:

61. California Institute of Technology (R. F. Bacher)
62. Massachusetts Institute of Technology (Department of Electrical Engineering)
63. University of California (Gerhard Klein)
64-65. Ohio State University (Professor of Naval Science)
66-315. Given distribution as shown in TID 4500 under Health and Biology Category.

Reports previously issued in this series are as follows:

ORNL-166	Period Ending August 31, 1948
ORNL-227	Period Ending November 30, 1948
ORNL-346	Period Ending February 28, 1949
ORNL-375	Period Ending July 15, 1949
ORNL-495	Period Ending October 15, 1949
ORNL-596	Period Ending January 15, 1950
ORNL-695	Period Ending April 15, 1950
ORNL-786	Period Ending July 15, 1950
ORNL-877	Period Ending October 20, 1950
ORNL-968	Period Ending January 20, 1951
ORNL-1086	Period Ending July 20, 1951
ORNL-1174	Period Ending October 20, 1951
ORNL-1277	Period Ending January 20, 1952

TABLE OF CONTENTS

	PAGE
RADIOACTIVE WASTE DISPOSAL RESEARCH	1
Water and Liquid-Waste Decontamination Processes	1
Survey Studies and Ecological Study of White Oak Creek Drainage Area	2
Instrumentation and Techniques	4
THEORETICAL PHYSICS	7
Fast-Neutron Tolerance Calculations	7
Distribution of Energy Losses of Moving Ions	7
Projects in Progress	8
PHYSICS OF NUCLEAR RADIATIONS	8
Fast-Neutron Monitoring	8
Measurement of Ionizing Radiation by High-Frequency Variation	8
Skin Fluorescence After X-Irradiation	9
New Beta Spectrometer	9
Beta Particles	9
RADIOCHEMICAL ANALYSIS	10
Analysis of Effluent Water for Plutonium	10
PHYSICS OF RADIATION DOSIMETRY	10
X-Ray Dosimetry	10
Beta-Ray Dosimetry	11
Fast-Neutron Dosimeter	11
Dosimetry of Fast Neutrons	11
Tissue Depth Dose for Fast Neutrons	11
Thermal Neutron Measurements	11
Neutron-Scattering Calculations	12
Radiation Dosimetry Using Complex Molecules	12
EDUCATION AND TRAINING	12
AEC Fellowship Program	12
Training Program for AEC Contractors' Personnel	12
Military Training Program	13
Lectures and Seminars	13
Miscellaneous Activities	13
EXPERIMENTAL RADIATION MEASUREMENTS	13
Portable Recording Scintillometer	13
Uranium Prospecting	13

PERMISSIBLE INTERNAL DOSE - RADIOISOTOPES 15

Spectrographic Analysis of Human Tissue 15
Maximum Permissible Concentrations 15

RADIOACTIVE PARTICLE PROGRAM AND PEEP PROGRAM 20

EXPOSURE EXPERIMENT WITH MIXED GAMMA AND NEUTRON RADIATIONS 21

MEASUREMENTS OF THE VALUE OF *W* FOR ALPHA PARTICLES IN VARIOUS GASES 22

PUBLICATIONS AND SPECIAL REPORTS 23

Publications 23
Special Reports 24

HEALTH PHYSICS DIVISION PROGRESS REPORT

RADIOACTIVE WASTE DISPOSAL RESEARCH

R. J. Morton

The organization of the cooperative program of research on water decontamination and other radioactive waste problems by the U. S. Public Health Service and the Oak Ridge National Laboratory was completed during the period covered by this report. This included the assignment of two Public Health Service chemists, which makes a total of seven on-loan employees who are integrated into this joint program.

The project of the Engineer Research and Development Laboratories has been planned in detail for the next fiscal year. In addition to the radiochemist assigned from the Corps of Engineers to this project about a year ago, two technician-operators joined the group about March 1, and on June 24 the transfer of a fourth worker completed the on-loan staff of this project.

Three graduate students have completed their research problems on radioactive waste. These projects are in fulfillment of the thesis requirement in sanitary engineering for master of science degrees to be granted by North Carolina State College, Virginia Polytechnic Institute, and the University of Tennessee.

The Tennessee Valley Authority found it necessary to discontinue the loan of a full-time sanitary engineer to the Health Physics waste research group effective at the end of February. Cooperation of the TVA is being continued through part-time consultation, by the provision of data that are essential to the waste disposal studies at the Laboratory, and by assistance in the conduct of river survey studies. The TVA continues primary responsibility for the ecological studies of the White Oak drainage area; the first phase of these studies has been completed.

WATER AND LIQUID-WASTE DECONTAMINATION PROCESSES

T. W. Brockett
H. E. Butcher
M. W. Carter
A. G. Friend
W. J. Lacy
D. A. Pecsok
O. R. Placak
M. S. Seal
C. P. Straub
E. C. Tabor
H. J. Wyrick

Removal of Iodine-131 and Strontium-89 from Tap Water by Ion Exchange. The purpose of this investigation, conducted as a graduate thesis project by A. G. Friend, was to determine the efficiency of ion-exchange resins in the removal of carrier-free radioiodine (I^{131}) and carrier-free radiostrontium (Sr^{89}) from tap water. The data that were collected indicated excellent positive results.

The concentration of the radioisotopes used in this series of tests was approximately 1.7×10^{-2} $\mu c/ml$. The resins employed were a strongly basic type of anion resin (Amberlite IRA-400) and a strongly acid type of cation resin (Amberlite IR-120). The anion resin was used on the chloride and the hydroxide cycles, and the cation resin was used on the hydrogen, sodium, and calcium cycles.

The investigation was conducted in three parts: (1) the removal of I^{131} by an anion resin bed and a mixed resin bed, (2) the removal of Sr^{89} by a

cation resin bed and a mixed resin bed, and (3) the removal of a mixture of I^{131} and Sr^{89} by a mixed resin bed. The results showed wide variations in removals, but in all instances superior removals were obtained with the mixed resin bed.

Evaluation of Water Purification Equipment for the Removal of Fission Products. Personnel of the Engineer and Research Laboratories have evaluated some water purification equipment to determine the reduction of radioactivity in water that can be obtained. This equipment consists of a standard diatomite filter outfit in a portable 1-man pack that has a capacity of 15 gal/min. The process is discontinuous and treats 500 gal of water per batch. The contaminant used was a 3-year-old fission-product mixture. The constituents of the mixture and their approximate contributions to the activity are given in Table 1. It is presumed that greater removals could be expected on a fresh fission-product mixture containing many easy-to-remove radioisotopes of short half life.

Table 1

CONTAMINANT MIXTURE USED IN EVALUATING WATER-PURIFICATION EQUIPMENT

NUCLIDE	CONTRIBUTION TO TOTAL ACTIVITY (%)
Ce^{144}-Pr^{144}	40
Pm^{147}	20
Sr^{90}-Y^{90}	18
Ce^{137}-Ba^{137}	14
Ru^{106}-Rh^{106}	6
Others	2
Total	100

The water contaminated with mixed fission products was pretreated either with powdered iron, a local clay slurry, or ferric chloride-limestone coagulation and was then allowed to settle. The supernatant liquid was coagulated by using ferric chloride and calcium carbonate. After it had settled, the supernatant liquid was filtered through the diatomite filter in accordance with standard practice. Figure 1 is a diagrammatic sketch of the procedure used. Samples were taken before and after each treatment and tested for pH, alkalinity (methyl orange), and radioactivity. The results are given in Table 2.

SURVEY STUDIES AND ECOLOGICAL STUDY OF WHITE OAK CREEK DRAINAGE AREA

T. W. Brockett
M. J. Cook
E. R. Eastwood
J. M. Garner
W. T. Helm
V. I. Knobf
L. A. Krumholz
W. T. Miller
R. J. Morton
F. R. Nease
R. L. Nichols

Ecological Survey of White Oak Creek. In cooperation with the Department of Botany of the University of Tennessee, specimens of plants collected from the White Oak Creek area have been prepared as permanent collections. Complete reference collections will be maintained at that institution, at the National Herbarium, and at Duke University.

Stomach contents of bluegills and black crappies are being identified and analyzed. The findings are being correlated with the relative abundance of the various organisms taken in the limnological collections.

The field work for the second spring estimate (the fourth in a series of six semiannual estimates) of the fish population of White Oak Lake has been completed. The report for the

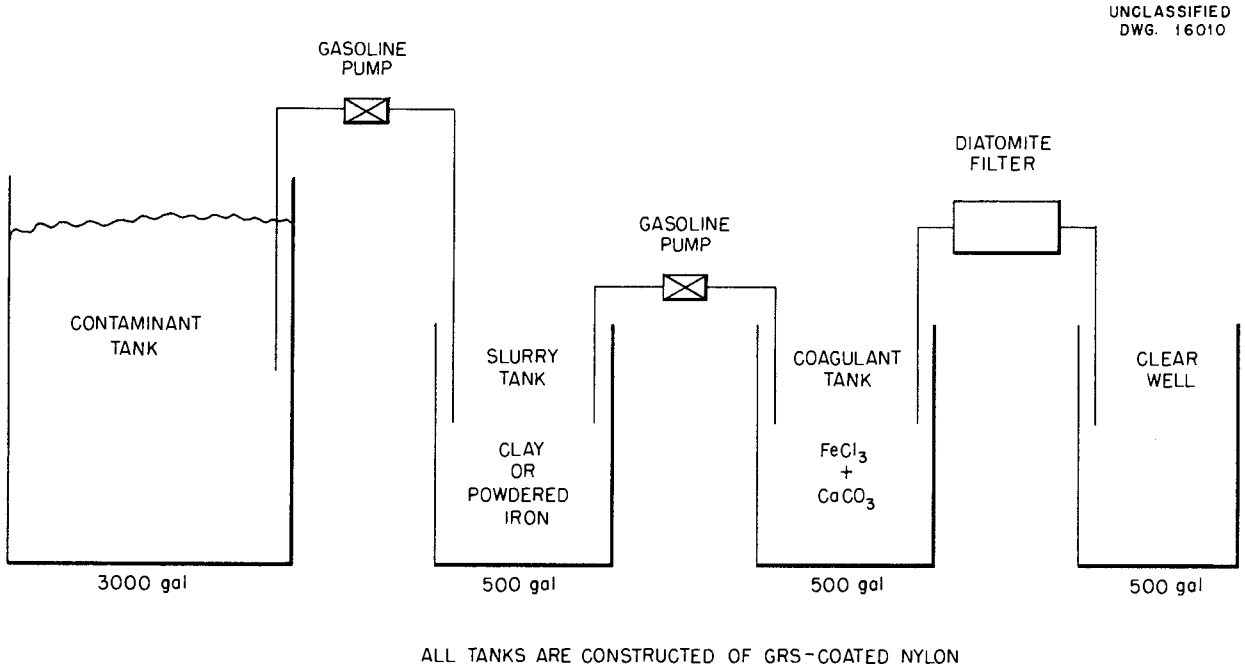

Fig. 1. Diagram of Treatment Procedure.

Table 2

EVALUATION OF DIATOMITE FILTER SET NO. 2

RUN NO.	INITIAL CONDITIONS			TREATMENT		FINAL CONDITIONS			ACTIVITY REMOVED (%)
	pH	Alkalinity (ppm)	Activity* (c/m/ml)	Pretreatment**	Coagulation and Filtration	pH	Alkalinity (ppm)	Activity* (c/m/ml)	
1	7.6	80	2780	335 g of powdered iron	335 g of $FeCl_3$ 450 g of $CaCO_3$	5.6	15	1079	60
2	7.4	82	2781	1890 g of powdered clay	335 g of $FeCl_3$ 900 g of $CaCO_3$	6.2	32	810	71
3	7.8	81	2722	First coagulation 335 g of $FeCl_3$ 900 g of $CaCO_3$	Second coagulation 335 g of $FeCl_3$ 1350 g of $CaCO_3$	5.7	21	1060	61

*Uncorrected for geometry and coincidence.

**Pretreatment with powdered iron removed 55% of activity.
Pretreatment with powdered clay removed 60% of activity.
Pretreatment by coagulation removed 53% of activity.

third semiannual estimate (September-October, 1951) was released in February. The radioassay of bluegill and black crappie tissues is continuing in order to ascertain what seasonal changes may take place in the amount of radioactive materials accumulated in the various tissues.

A population of *Gambusia affinis affinis*, which originated from the fish introduced into the settling basin in May 1951, has become well established in White Oak Lake. Within 30 days after their introduction into the settling basin more than 50 of these fish and/or their offspring were found in White Oak Lake. In an earlier report[1] the population of *Gambusia* in the settling basin was reported as destroyed, presumably by some toxic chemical waste. Such a statement is misleading, inasmuch as a portion of the group obviously migrated downstream into White Oak Lake.

Location and Studies of Chemical Waste Storage Pits. The second of two unlined pits for the storage of liquid chemical wastes was constructed during this period. The first pit was installed in July 1951 and was partly filled with wastes during the period August 1 to October 5, 1951. Both pits are located in a deep shale formation on the water shed of White Oak Lake and within the controlled area of the Laboratory. Information obtained from the consulting geologist of the AEC and from the Ground Water Branch of the U. S. Geological Survey indicates that the shale formation is deep and relatively impervious and that seepage of the wastes through the shale away from the pit should be at a very slow rate and in the direction of White Oak Lake. The storage of liquid wastes in these pits is being accepted on an experimental basis.

After preliminary observations on the first pit, the second pit (pit number 2) has been so designed and equipped that extensive studies can be made. Wells 93 ft deep have been dug, one on each of three sides of this pit, and, before any waste was deposited in the pit, records of the ground water elevations in the wells, logging of the wells for natural radioactivity, and chemical analysis of a sample of water from each well were made. A record is made of the volume of each portion of liquid waste that is added to the pit, and a sample of the liquid is taken for analysis and study of its decay rate. The following observations in the pit area are made (some on a continuous basis, others periodically): determination of the liquid level in the pit, logging of the wells for radioactivity, analysis of the water in the wells (chemical and radioassay), determination of ground-water elevation in the wells, scanning of the surrounding ground and vegetation for any evidence of an increase in radioactivity owing to seepage, and estimation of the radioactivity in the pit. The Knoxville office of the U. S. Geological Survey is cooperating in these studies, particularly in the ground water measurements and in the analysis of the water and shale samples. Collateral studies including percolation and contact tests of the shale material to determine the capacity of this material for absorbing and holding radioactive constituents of waste are being made.

INSTRUMENTATION AND TECHNIQUES

R. H. Dean
J. M. Garner
C. E. Graham
F. Kalil
B. Kahn
W. J. Lacy
R. L. Nichols

Evaluation of Commercially Available Instruments for the Measurement of Radioactivity in Water. Several types

[1] *Health Physics Division Quarterly Progress for Period Ending October 20, 1951*, ORNL-1174.

of commercial, portable instruments are being studied to determine how useful and effective they are for the measurement of radioactive contamination in water, particularly for the routine monitoring of water supplies as well as for the detection of emergency levels of contamination that might result from laboratory accidents or atomic explosions. Electroscopes and G-M survey meters have been tested to date.

The responses of several types of portable G-M survey meters to various radioisotopes and to mixtures of fission products in water were observed by using volumes of standard solutions between 0.15 and 7.0 liters with concentrations of radioactivity between 10^{-4} and 10^{-1} μc/ml. Landsverk and Lauritzen electroscopes were investigated by using volumes of less than 0.5 liters and the same range of concentration. The responses of the instruments were obtained for the different standards and likewise for various energies of beta and gamma radiation. Knowledge of the range and sensitivity of the instruments studied will make possible recommendations concerning their use in water monitoring. In connection with this work a series of beta-emitting radioisotopes was studied to select standards covering a wide range of energies.[2]

Electroscopes. The electroscope may be read over a range of about 10,000 times the lowest detectable concentrations. As indicated in Fig. 2, for representative alpha-, beta-, and gamma-radiation emitters

[2] W. S. Lyon and B. Kahn, *Analytical Chemistry Division Quarterly Progress Report for Period Ending March 26, 1952*, ORNL-1276, p. 21 and 23.

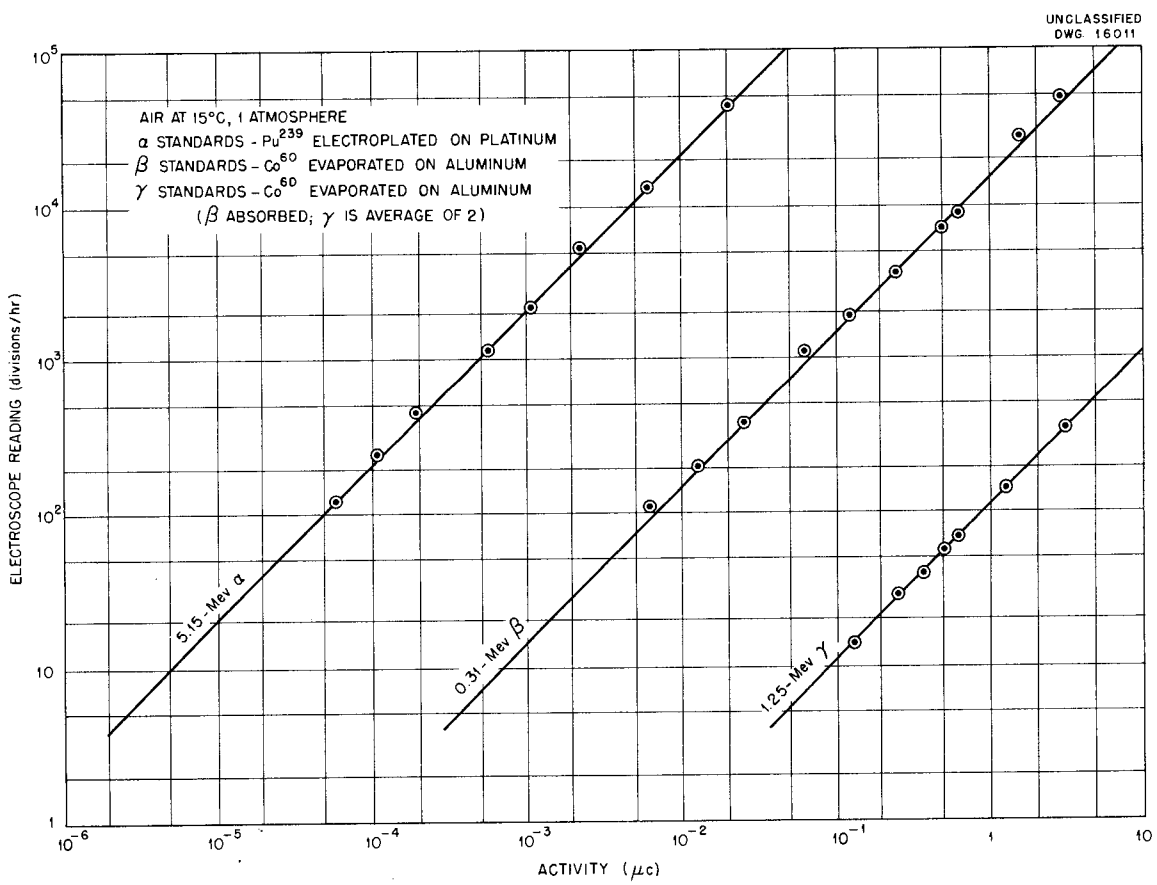

Fig. 2. Sensitivity of Landsverk Electroscope L-75.

that had been deposited upon planchets, alpha radiation was detectable at an activity as low as 10^{-6} μc, beta radiation at 10^{-4} μc, and gamma radiation at approximately 10^{-2} μc. The concentrations in μc/ml can be calculated from the activity and volume of solution evaporated. Whether these sensitivities are sufficient for routine use may be determined by comparison with the accepted values for the maximum permissible concentration of the various radioisotopes in water (cf., "Maximum Permissible Concentrations," this report). The response of the electroscope is sufficient for determining the concentrations of fission products in drinking water that may be deemed safe for emergency use after an atomic explosion.

G-M Survey Meters. The use of sensitive beta-gamma G-M survey meters for the detection of emergency levels of radioactivity in drinking water has been suggested by various workers. The meter readings may be obtained by holding the probe of the instrument above the surface of the sample to be tested or by submerging it. A sample of unknown concentration of radioactive constituents can be monitored in terms of milliroentgens per hour, and such readings can then be converted by means of a calibration curve to concentrations in microcuries per milliliter. In these studies a variety of tests were made with three types of survey meters and with five interchangeable probes by using water solutions of various radioisotopes and of mixed fission products.

It was found that the response of different types of survey meters to the same solution varied considerably. There was a wide range in the response of any given meter to the solution of different radioisotopes. This range is indicated by the curves shown in Fig. 3. All the radioisotopes studied gave curves falling between those for Ru^{106}-Rh^{106} and Tl^{204} (see Fig. 3). It would be expected that a sample containing the usual diverse mixture of unknown radioisotopes probably would fall on a line in the central portion of the range and certainly between the extreme high and low values that are shown. The fission-product curve shown in Fig. 3 was obtained with a three-year-old fission product mixture.

Monitoring and Telemetering at White Oak Dam. The installation of equipment for the measuring and recording water elevations and levels of radioactivity at White Oak Dam and telemetering the measurements to the X-10 area has been completed. Preliminary tests have been made and modifications are in progress. After calibration, this system will provide continuous records at the dam and at the Laboratory of the volume of water and the concentration of radioactivity in the water discharged from White Oak Lake.

Well-logging Equipment. Two new assemblies of equipment for making logs of the radioactivity in wells have been completed and put into service. Three of these trailer-mounted units are now available for routine observations and for special studies of the 55 test wells that have been drilled in the X-10 area.

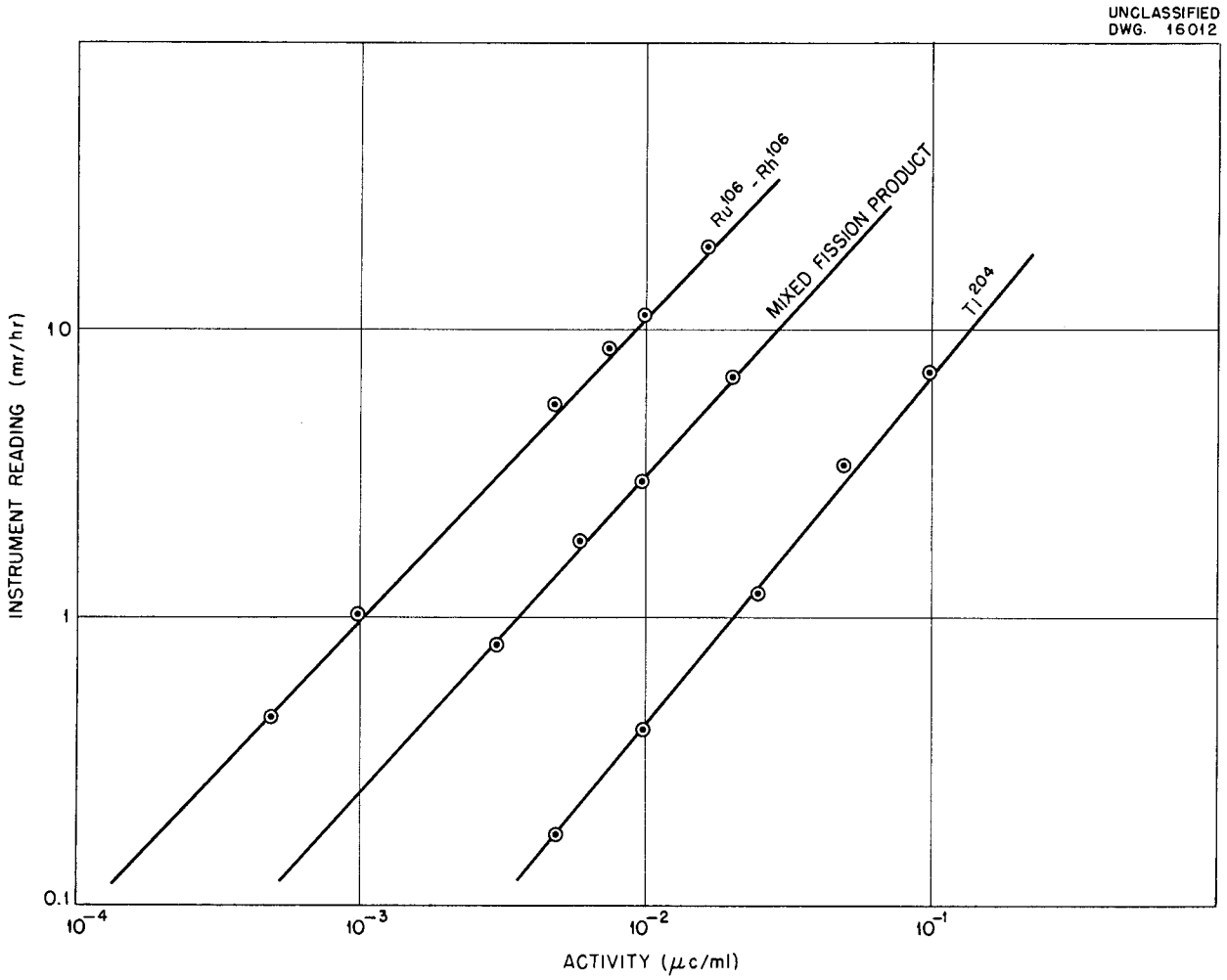

Fig. 3. Typical Readings of a Beta-Gamma Survey Meter with Probe Submerged in Radioactive Solutions of Known Concentrations.

THEORETICAL PHYSICS

J. Neufeld W. S. Snyder

FAST-NEUTRON TOLERANCE CALCULATIONS

The results of the Monte Carlo study of fast-neutron irradiation of tissue have been prepared for publication and a report describing them is being written.

DISTRIBUTION OF ENERGY LOSSES OF MOVING IONS

Additional evaluations have been made of the fractions of the total energy that are absorbed within portions of various widths in the

track of a heavy, ionizing particle. These widths have been compared with the size of cells, viruses, etc. in order to estimate the biological effectiveness of the particles. A report comprising these data, together with the graphs representing the energy loss distributions at various distances from the track, has been completed.

PROJECTS IN PROGRESS

Calculations of maximum permissible exposures for fast and thermal neutrons distributed isotropically, and for beams entering a tissue slab at various angles, are being studied to determine the most efficient program for their computation.

PHYSICS OF NUCLEAR RADIATIONS

H. K. Richards

FAST-NEUTRON MONITORING

J. S. Cheka

A pair of ionization chambers to measure fast neutrons in the presence of gamma radiation is being constructed. Both chambers will be adjusted to give equal response to gamma radiation. The chamber lined with graphite will record gamma-ray ionization only, whereas the other one, which contains a polyethylene lining, will produce, in addition, recoil protons. The difference in ionization will be read by means of an electrometer. Since the permissible exposure of fast neutrons produces only 10% of the ionization of the permissible gamma-ray dose, the calibration will have to be very exact.

An improvement was made in the microscopy of nuclear track film. The current procedure, employed here and elsewhere, consists in the scanning of a number of microscope fields at approximately 900X by using dark-field illumination. Since a field has an area of 2×10^{-4} cm^2, and a week's permissible exposure produces about 2×10^3 recognizable proton tracks per cm^2, the reliability of the track count in 12, or even 24, fields is low, and the estimate of a fraction of a week's permissible fast-neutron exposure is meaningless. If the 90X objective is replaced by a 44X objective and 10X-wide field eyepieces are used, the field diameter increases from 0.016 to 0.045 cm and the area increases from 0.0002 to 0.0016 cm^2, a factor of 8. If stops are set so that the mechanical stage can travel 1.11 cm laterally, a traverse can be made instead of scanning individual fields. With such a traverse 0.050 cm^2 can be scanned in little more time than it takes to read 12 fields (0.0024 cm^2) at 900X. Thus, exposure to the maximum permissible fast-neutron flux is estimated on the basis of 100 tracks in the scanned area rather than on the basis of five tracks.

MEASUREMENT OF IONIZING RADIATION BY HIGH-FREQUENCY VARIATION

H. K. Richards

A new electrometer, with a quartz fiber of 6×10^{-4} in. in diameter, was constructed and tested for the measurement of ionizing radiation by high-frequency variation. At the region of maximum sensitivity the frequency variation was about 160 cycles per volt. The carrier frequency was

2300 kilocycles. Since the electrostatic capacitance of the electrometer was approximately 4 cm, the variation of the electrostatic charge, q, per volt is given by:

$$\frac{dq}{dV} = 1.33 \times 10^{-2} \text{ esu/v}$$

$$\text{or } 2.77 \times 10^{7} \text{ electrons/v} .$$

By dividing by 160, the charge variation per cycle is given by:

$$\frac{dq}{\text{cycle}} = 8.3 \times 10^{-5} \text{ esu/cycle}$$

$$= 1.73 \times 10^{5} \text{ electrons/cycle} .$$

By comparing this order of magnitude with the experimental data, the following result was obtained: A radium-gamma source producing 1.4 mr/hr at the center of the electrometer corresponds to 2.33×10^{-5} esu/min/cc or 4.85×10^{4} electrons/min/cc. Since the frequency variation amounted to 32 cycles/min the number of electrons or ion pairs/cycle/cc was 1.52×10^{3}. The total volume was somewhat above 100 cc and the total number of electron pairs was 1.52×10^{5}, a figure that agrees with the estimated value given above in its order of magnitude.

In addition to the exposure to gamma radiation, neutrons from a polonium-boron source have been used to produce recoil protons from polyethylene inside the electrometer. The number of neutrons was about 4.7×10^{4}/min·cm^{2}. Since the target area of the polyethylene was about 25 cm^{2}, 1.17×10^{6} neutrons were available for proton production. The gamma effect of the polonium-boron source was known by a previous measurement without the polyethylene. A 1-in. bismuth shield reduced the gamma-ray effect to a minimum. The frequency change caused by the recoil protons was measured as 17 cycles per minute.

A new electrometer with quartz crystals as frequency stabilizers has been completed. At frequencies between 15 and 30 megacycles, the frequency can be varied within 10 to 20 kilocycles by adding parallel reactances to the crystal circuit. It is intended that the electrometer capacitances be used to produce these variations.

SKIN FLUORESCENCE AFTER X-IRRADIATION

R. D. Birkhoff

The fluorescence of human skin under ultraviolet light after exposure to x radiation was studied with regard to its application to dosage measurements in a preliminary survey started by the Health Physics Division in cooperation with the University of Tennessee Physics Department. Fluorescence for some persons was observed, but variation in light output for an individual and also between individuals was so great that dosage measurements by this method were not deemed practical.

NEW BETA SPECTROMETER

R. D. Birkhoff A. W. Smith

Plans for the new beta spectrometer and associated control circuits are nearing completion. Much of this work is under the direction of A. W. Smith, a temporary summer employee, from Baylor University. Actual construction has been started at K-25 after several delays owing to difficulties in obtaining material and to schedule conflicts.

BETA PARTICLES

T. E. Bortner

The range of beta particles of P^{32} has been established in seven different

absorbers, including aluminum. This work was done with a standard thin-window counter inside a lead shield. Full details are given in another report.[1]

During the work previously described it was found that the beryllium absorbers were emitting ionizing particles. It was shown that the source of radiation was not surface contamination. The beta-ray energy appeared to be about 1 Mev. Spectrographic analysis gave no hint as to the identity of the radioactive element.

The power supply on the magnetic separator has been changed so that its output is about 3 amp instead of 10. This current is ample for the contemplated beta-ray work and is more easily controlled than the higher current. The magnetic field has been measured and plotted for various sizes and shapes of pole faces.

[1] T. E. Bortner, *The Range of Beta Particles of P^{32} in Different Atomic Number Absorbers*, CF 52-2-81 (February 14, 1952).

RADIOCHEMICAL ANALYSIS

L. B. Farabee

ANALYSIS OF EFFLUENT WATER FOR PLUTONIUM

Recently, revisions were made in the analytical procedures for the assay of plutonium in the effluents discharged from the settling basin into the White Oak Creek and from the White Oak Dam into the Clinch River. The procedure for the analysis of water taken at the White Oak Dam was reported previously.[1] During the last several months, work has been conducted in selecting and testing a suitable procedure for the analysis of plutonium in the effluent water discharged from the settling basin. The procedure selected was fairly quantitative and reproducible, and with it an average recovery of 89.4% (with a maximum deviation of 5.3%) was achieved in 15 experimental runs. As of July 1, 1952 these new procedures were put into use for the routine analyses of composite water samples by the Chemical Analysis Unit of the Applied Health Physics Sections.

[1] *Health Physics Division Quarterly Progress Report for Period Ending January 20, 1952*, ORNL-1277.

PHYSICS OF RADIATION DOSIMETRY

H. H. Hubbell

X-RAY DOSIMETRY

H. H. Hubbell F. H. W. Noll

Design has been completed and construction begun on the apparatus to measure the saturation effects in pocket ionization chambers at different dose rates.

The standard air-ionization chamber in the Division has been modified with an improved voltage divider, insulators, connectors, and carefully measured window diaphragms. Sets of aluminum, copper, and lead filters have been made for the x-ray machine for standardization of the effective energy of the x radiation for any

setting of the controls. The x-ray machine will then be used for a redetermination of the energy dependence of the sensitivity of all readily available types of commercial x-ray and personnel monitoring film.

BETA-RAY DOSIMETRY

H. H. Hubbell

Work has been resumed on a pocket chamber designed to have the usual sensitivity to gamma rays and also to be sensitive to any beta rays that have sufficient energy to penetrate the dead layer of the human epidermis. A sample chamber is being tested. A hollow uranium cylinder has been constructed as a standard exposure source; it gives dose values that agree with the values calculated from results obtained with the extrapolation chamber on plane sources.

FAST-NEUTRON DOSIMETER

H. H. Hubbell

Satisfactory models of the portable, fast-neutron, count-rate dosimeter previously described are now being delivered under contract by a commercial manufacturer. The instruments made under this contract are checked and calibrated at ORNL and then distributed to various AEC sites as requested by the AEC Radiation Instruments Branch.

DOSIMETRY OF FAST NEUTRONS

G. S. Hurst

Work has continued on the development of a nondirectional fast-neutron detector that may be calibrated by means of an alpha-particle source contained within the counter. It should be possible to measure with this detector in absolute units the energy absorbed from a fast-neutron beam per gram of ethylene, which approximates soft tissue in composition. It was previously found that the energy absorbed from fast neutrons was a factor of 2 or 3 less than the calculated values. A reason for this factor was thought to be the capture of most of the free electrons by oxygen atoms; consequently a purifier containing hot calcium was added to the counter, and agreement within about 5% is now obtained between the measured and computed values of the energy absorption.

TISSUE DEPTH DOSE FOR FAST NEUTRONS

G. S. Hurst T. A. Barr, Jr.

The apparatus for measuring the tissue depth dose from fast neutrons has been completed. The phantom consists of a cylindrical tank 30 cm in height and 200 cm in diameter, filled with a mixture of urea, sugar, and water in such proportions as to duplicate average soft tissue. The dosimeters are small proportional counters lined with polyethylene and filled with ethylene in order to approximate a Bragg-Gray cavity. The dose value will be obtained from these counters by integrating the heights of the pulses with the apparatus described by Glass and Hurst.[1] Calibration of the electronic instruments and the neutron counter is nearly completed.

THERMAL-NEUTRON MEASUREMENTS

R. H. Ritchie

An ORNL report on the determination of the diffusion length in graphite

[1] F. M. Glass and G. S. Hurst, *Rev. Sci. Instruments* (February 1952), p. 67.

is complete and in the process of declassification.

A restandardization of the thermal flux in the X-10 sigma pile is nearly complete and will be written up as an ORNL report.

A letter has been submitted to the editor of the *Physical Review* on "Thermal Neutron Measurements in Graphite Using Gold and Indium Foils," by E. D. Klema and R. H. Ritchie.

NEUTRON-SCATTERING CALCULATIONS

R. H. Ritchie

Extensive calculations have been made on the scattering of fast neutrons from the ground and from various structures, and results are given in several classified reports.[2,3]

Two chapters are being prepared for the shielding section of the *Reactor Handbook*, one on the maximum permissible exposure for various radiations and the other on the scattering of gamma and neutron radiations from various shielding structures, etc.

RADIATION DOSIMETRY USING COMPLEX MOLECULES

M. Slater

Equipment and materials have been collected for the study of the inactivation of complex molecules, such as enzymes, by heat and by ionizing radiations. This work is envisaged as the first step in a larger program of studying the basic problems of dosimetry in tissue. As a source of electrons for this work, a small accelerator has been designed through the extensive cooperation of the High Voltage Section of the Physics Division. Its main components are now being fabricated.

Assay methods and techniques have been studied, and the properties of a commercially prepared sample of the enzyme catalase, which catalyzes the decomposition of hydrogen peroxide, have been investigated. The properties, such as reaction velocity, optical absorption spectrum, effects of concentration, pH, and reaction temperature, etc., agree reasonably well with those reported in the literature. They will be compared with those found for dry and wet samples inactivated by heat or radiation or both.

(2) E. P. Blizard, C. E. Clifford, J. L. Meem, R. H. Ritchie, and A. Simon, *Proposal for a Divided Shield for Testing Facility*, CF 52-4-85 (April 4, 1952).

(3) A. Simon and R. H. Ritchie, *Background Calculations for the Proposed Tower Shielding Facility*, ORNL-1273 (to be issued).

EDUCATION AND TRAINING

E. E. Anderson M. F. Fair
M. R. Ford

AEC FELLOWSHIP PROGRAM

The graduate course in radiological physics taught by members of the Health Physics Division at Vanderbilt University began February 4 and continued, during the remainder of the school year, through May 26. The Fellows began their field-training program at the Oak Ridge National Laboratory on June 11.

TRAINING PROGRAM FOR AEC CONTRACTORS' PERSONNEL

Four employees of the DuPont Company have been associated with this section for training during this

period, and one employee of the Dow Chemical Company received training for a period of one week. Four American Cyanamid Company employees completed their assignment at the Laboratory and left for Idaho in May.

MILITARY TRAINING PROGRAM

Pfc. Prestele from Camp Detrick, Maryland, spent three and one-half weeks at the Laboratory observing Health Physics practices in the field.

Ten medical officers from Duke University and five from Reed College spent eight weeks during this period in lectures, classroom work, and field training.

LECTURES AND SEMINARS

Four seminars on health physics were conducted for ORINS. As participation in the Travel Lecture Program of ORNL, lectures on radiation hazards were given as follows: single lectures at Alabama Polytechnic Institute, the University of Georgia, Meharry Medical College, Quartermaster's School at Fort Lee, Virginia, and at Chattanooga; two at Vanderbilt University; and two at the University of Tennessee, Memphis.

MISCELLANEOUS ACTIVITIES

Members of the staff continued to assist in other teaching activities of the Laboratory, which consisted of giving two courses in mathematics in the Apprentice Training School and of presenting the lectures on health physics in the Orientation Program.

The first draft of the section on health physics for the textbook on reactor engineering has been completed.

EXPERIMENTAL RADIATION MEASUREMENTS

F. J. Davis

PORTABLE RECORDING SCINTILLOMETER

C. F. Harris J. A. Harter

A project for the development of a portable recording scintillometer weighing approximately 25 lb for use in light aircraft has been initiated. In case of a disaster, this instrument can be used for making a rapid survey to determine the radiation hazard of a contaminated area. Other possible uses for it are uranium prospecting, determining the extent of accumulated contamination in areas that surround industries which use or process radioactive material, or determining the fall-out from atom bomb explosions.

URANIUM PROSPECTING[1]

F. J. Davis P. W. Reinhardt

Surveys of areas in Wyoming and Colorado were made during the month of May; however, further work was halted owing to contamination of areas by the recent atomic tests. In the neighborhood of Casper, Wyoming, on May 24, the background was found to be 4 to 5 times normal (normal being that at the Knoxville, Tennessee, airport). After the atomic blast on May 25, the radiation was found to be 18 to 20 times normal near Denver on May 27. Figure 4

[1] In cooperation with the U. S. Geological Survey.

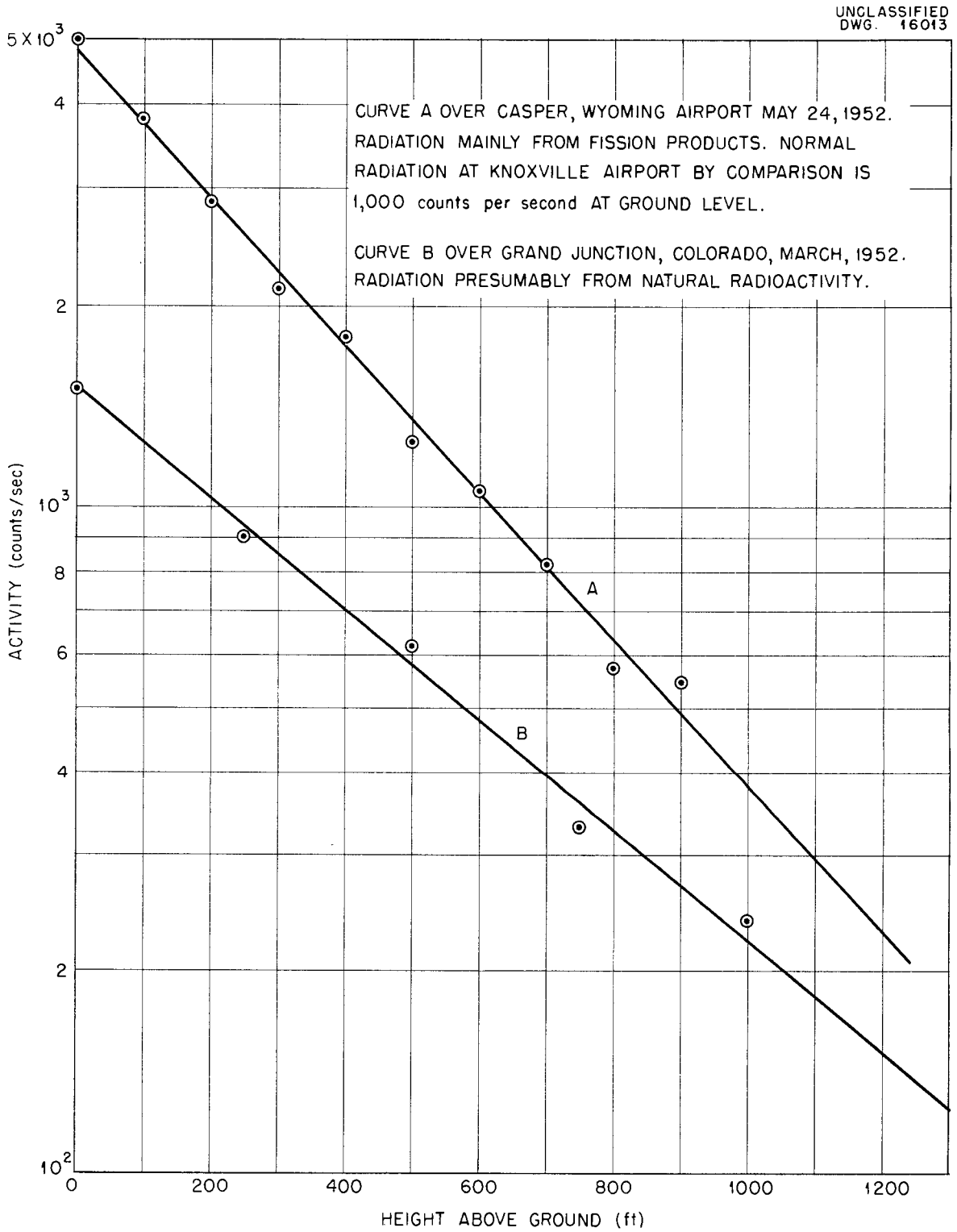

Fig. 4. Variation of Radiation with Height.

shows the variation of radiation intensity with height. Curve A in this figure represents data taken on May 24 at the Casper, Wyoming, airport, where the bulk of the radiation was from fission products. For comparison purposes, curve B represents data taken in March 1952 at the Grand Junction, Colorado, airport, where the radiation was presumably from natural sources. Both curves are nearly straight-line on semilog coordinates, which indicates that the radiation as a function of height can be expressed as a simple exponential function. This exponential function can be derived theoretically by assuming a buildup from scattered radiation that is proportional to the height, as suggested in an earlier progress report.[2] It is to be noted that the slope of curve A is greater than that of curve B. The half thickness of air for curve A is 260 ft; for curve B it is 370 feet. This can be explained by assuming that the gamma rays from the fission products have a different energy distribution than those from natural radioactivity.

[2] *Health Physics Division Quarterly Progress Report for Period Ending July 15, 1950*, ORNL-786.

PERMISSIBLE INTERNAL DOSE - RADIOISOTOPES

K. Z. Morgan

SPECTROGRAPHIC ANALYSIS OF HUMAN TISSUE[1]

I. H. Tipton

Since January 20, 56 tissues from Deaconess Hospital in Boston, 15 from Alabama Medical College in Birmingham, 36 from the University of Tennessee Medical College in Memphis, and 15 from Ohio State University Medical School in Columbus have been received for spectrographic analysis.

The tissues are carbonized on a hot plate and ashed in a muffle furnace at 500°C. Three milligram samples of ash are mixed with the same amount of pure powdered graphite and loaded into a crater 1/4 in. deep and 1/16 in. in diameter in a 1/8-in. pure-graphite electrode. This electrode is made the cathode in a 10-amp d-c arc, and the cathode layer is focused on the slit of a Bausch and Lomb Littrow spectrograph. The region 2488 Å to 3474 Å is photographed on Eastman Spectrum Analysis No. 2 plate, and quartz optics are used. Glass optics are used for the region 3900 Å to 5300 Å.

All the tissues received to date have been ashed and their spectra recorded. The plates are being examined qualitatively. Ash standards are being prepared for quantitative estimations for 23 elements.

[1] University of Tennessee Research and Development Subcontract.

MAXIMUM PERMISSIBLE CONCENTRATIONS

K. Z. Morgan M. J. Cook
M. R. Ford

Calculations have been made for the maximum permissible amounts of certain radioisotopes in the human body, in water, and in air. In Table 3 are listed the data that have already been approved by the Subcommittee on Internal Dose of the National Committee on Radiation Protection.

Table 4 gives data on supplementary isotopes. This information has been submitted to the Subcommittee and tentatively approved.

The data in Table 5 were calculated recently and will be submitted to the Subcommittee.

Table 3

APPROVED MAXIMUM PERMISSIBLE AMOUNT OF RADIOISOTOPE IN TOTAL BODY AND MAXIMUM PERMISSIBLE CONCENTRATION IN AIR AND WATER FOR CONTINUOUS EXPOSURE

ELEMENT	ORGAN	TOTAL BODY (μc)	WATER ($\mu c/cc$)	AIR ($\mu c/cc$)
Natural U (soluble)	Kidneys	0.02	7×10^{-5}	1.7×10^{-11}
Natural U (insoluble)	Lungs	0.009		1.7×10^{-11}
U^{233} (soluble)	Bone	0.04	1.5×10^{-4}	1×10^{-10}
U^{233} (insoluble)	Lungs	0.008		1.6×10^{-11}
Ra^{226}	Bone	0.1	4×10^{-8}	8×10^{-12}
Rn^{222}	Body		2×10^{-6}	10^{-8}
Pu^{239} (soluble)	Bone	0.04	1.5×10^{-6}	2×10^{-12}
Pu^{239} (insoluble)	Lungs	0.008		2×10^{-12}
Po^{210} (soluble)	Spleen	0.02	3×10^{-5}	2×10^{-10}
Po^{210} (insoluble)	Lungs	7×10^{-3}		7×10^{-11}
$C^{14}(CO_2)$	Fat	250	3×10^{-3}	10^{-6}
$C^{14}(CO_2)$	Bone	1500	4×10^{-3}	5×10^{-7}
H^3(HTO or H_2^3O)	Total body	10^4	0.2	2×10^{-5}
Ca^{45}	Bone	65	5×10^{-4}	3×10^{-8}
P^{32}	Bone	10	2×10^{-4}	1×10^{-7}
K^{42}	Muscle	20	1×10^{-2}	2×10^{-6}
S^{35}	Skin	100	5×10^{-3}	10^{-6}
Na^{24}	Total body	15	8×10^{-3}	2×10^{-6}
Cl^{36}	Total body	200	2×10^{-3}	4×10^{-7}
Fe^{55}	Blood	1×10^3	4×10^{-3}	6×10^{-7}
Fe^{59}	Blood	11	1×10^{-4}	1.5×10^{-8}
Mn^{56}	Kidneys	2	0.15	3×10^{-6}
Mn^{56}	Liver	7.5	0.2	4×10^{-6}

Table 3 (continued)

ELEMENT	ORGAN	TOTAL BODY (μc)	WATER ($\mu c/cc$)	AIR ($\mu c/cc$)
Cu^{64}	Liver	1.5×10^{2}	8×10^{-2}	6×10^{-6}
I^{131}	Thyroid	0.3	3×10^{-5}	3×10^{-9}
Zn^{65}	Bone	430	6×10^{-2}	2×10^{-6}
Sr^{89}	Bone	2	7×10^{-5}	2×10^{-8}
Sr^{90}-Y^{90}	Bone	1	8×10^{-7}	2×10^{-10}
A^{41}	Total body	30	5×10^{-4}	5×10^{-7}
Xe^{133}	Total body	300	4×10^{-3}	4×10^{-6}
Xe^{135}	Total body	100	1×10^{-3}	2×10^{-6}
Co^{60}	Liver	3	2×10^{-2}	10^{-6}
Au^{198}	Kidneys	10	3×10^{-3}	1×10^{-7}
Au^{199}	Kidneys	28	7×10^{-3}	2.5×10^{-7}
Cr^{51}	Kidneys	390	0.5	8×10^{-6}
Ni^{59}	Liver	39	0.25	2×10^{-5}
Mo^{99}	Bone	50	14	2×10^{-3}
Th^{234}	Bone	120	3	6×10^{-7}
As^{76}	Kidneys	10	0.2	2×10^{-6}
Ga^{72}	Bone	8	9	3×10^{-6}
Ba^{140}-La^{140}	Bone	5	2×10^{-3}	6×10^{-8}

Table 4

TENTATIVELY APPROVED MAXIMUM PERMISSIBLE AMOUNT OF RADIOISOTOPE IN TOTAL BODY AND MAXIMUM PERMISSIBLE CONCENTRATION IN AIR AND WATER FOR CONTINUOUS EXPOSURE

ELEMENT	ORGAN	TOTAL BODY (μc)	WATER ($\mu c/cc$)	AIR ($\mu c/cc$)
F^{18}	Bone	24	0.9	10^{-4}
F^{18}	Teeth	0.07	2.5×10^{-3}	3×10^{-7}
Be^{7}	Bone	670	1	4×10^{-6}
Sc^{46}	Spleen	6	0.4	7×10^{-8}
V^{48}	Bone	20	0.5	10^{-6}
Ge^{71}	Kidneys	67	9	4×10^{-5}
Rb^{86}	Muscle	60	3×10^{-3}	4×10^{-7}
Y^{91}	Bone	15	0.2	4×10^{-8}
Nb^{95}	Bone	90	4×10^{-3}	4×10^{-7}
Tc^{96}	Kidneys	5	3×10^{-2}	3×10^{-6}
Ru^{106}-Rh^{106}	Kidneys	4	0.1	3×10^{-8}
Rh^{105}	Kidneys	9	1.5×10^{-2}	8.5×10^{-7}
Pd^{103}	Kidneys	6	1×10^{-2}	6×10^{-7}
Cd^{109}-Ag^{109m}	Liver	40	7×10^{-2}	7×10^{-8}
Sn^{113}	Bone	80	0.2	6×10^{-7}
Te^{127}	Kidneys	4	3×10^{-2}	10^{-7}
Te^{129}	Kidneys	1.3	10^{-2}	4×10^{-8}
Cs^{137}-Ba^{137m}	Muscle	90	1.5×10^{-3}	2×10^{-7}
La^{140}	Bone	24	1	10^{-6}
Re^{183}	Thyroid	35	8×10^{-2}	8×10^{-6}
Re^{183}	Skin	600	0.2	2×10^{-5}
Ir^{190}	Kidneys	21	10^{-2}	7×10^{-7}
Ir^{192}	Kidneys	3.4	9×10^{-4}	5×10^{-8}

Table 4 (continued)

ELEMENT	ORGAN	TOTAL BODY (μc)	WATER ($\mu c/cc$)	AIR ($\mu c/cc$)
Pb^{203}	Bone	57	0.1	6.5×10^{-6}
At^{211}	Thyroid	6×10^{-4}	2×10^{-6}	2×10^{-10}
Am^{241}	Bone	0.056	10^{-4}	3×10^{-11}
Cm^{242}	Bone	0.05	9×10^{-4}	2×10^{-10}
Ce^{144}-Pr^{144}	Bone	5	4×10^{-2}	7×10^{-9}
Pr^{143}	Bone	29	4×10^{-1}	7.5×10^{-7}
Pm^{147}	Bone	120	1	2×10^{-7}
Sm^{151}	Bone	420	5×10^{-1}	3×10^{-8}
Eu^{154}	Bone	22	3×10^{-2}	6×10^{-9}
Ho^{166}	Bone	17	23	3×10^{-6}
Tm^{170}	Bone	19	2.5×10^{-1}	5×10^{-8}
Lu^{177}	Bone	78	24	5×10^{-6}
Ag^{111}	Liver	36	4	3×10^{-5}
Ag^{105}	Liver	18	2	10^{-5}

Table 5

MAXIMUM PERMISSIBLE AMOUNT OF RADIOISOTOPE IN TOTAL BODY AND MAXIMUM PERMISSIBLE CONCENTRATION IN AIR AND WATER FOR CONTINUOUS EXPOSURE (to be submitted for approval)

ELEMENT	ORGAN	TOTAL BODY (μc)	WATER ($\mu c/cc$)	AIR ($\mu c/cc$)
W^{181}	Bone	32	1.6×10^{-1}	5.4×10^{-6}
Au^{196}	Liver	8	4.8×10^{-2}	1.9×10^{-7}
Sc^{46}	Liver	4.4	2.6×10^{-1}	5.1×10^{-8}
Sc^{47}	Liver	11	2.9	5.6×10^{-7}
Sc^{48}	Liver	2.8	1.3	2.6×10^{-7}
Tl^{200}	Muscle	37	2.2×10^{-2}	2.1×10^{-6}
Tl^{201}	Muscle	287	7.2×10^{-2}	6.6×10^{-6}
Tl^{202}	Muscle	218	2.0×10^{-2}	1.9×10^{-6}
Pt^{191}	Kidneys	2.3	5.6×10^{-3}	1.9×10^{-7}
Pt^{193}	Kidneys	2.6	4.6×10^{-3}	1.5×10^{-7}
Ir^{192}	Spleen	3.2	5.7×10^{-3}	2.8×10^{-8}
Rh^{105}	Kidneys	8.9	3.6×10^{-1}	1.4×10^{-6}
Am^{241}	Bone	0.074	6.9×10^{-5}	1.4×10^{-11}

RADIOACTIVE PARTICLE PROGRAM AND PEEP PROGRAM

E. G. Struxness

Effective with the start of fiscal year 1953, a new program, the Radioactive Particle Program, was inaugurated, and the Protective Equipment Evaluation Program (PEEP), formerly under the supervision of E. D. Shipley, ORNL associate research director, was transferred to the Health Physics Division. Personnel comprising the PEEP group were reassigned, although actual transfers are not yet effective.

The laboratory facilities, located in Building 2001, X-10 area, are being modified and it is expected that they will be sufficiently complete to permit occupancy by September 1. Meanwhile the investigations are being carried on in the present location, Building 9733-4 at the Y-12 area.

EXPOSURE EXPERIMENT WITH MIXED GAMMA AND NEUTRON RADIATIONS

W. T. Ham G. S. Hurst
M. Slater

The following is a summary of the dosimetry measurements proposed for use in Phase I of an experiment involving exposure of animals to a mixed gamma and neutron radiation field at ORNL. The purpose of these measurements is to determine the integral dose to the whole body and to specific organs (lens of eye, testes) with an accuracy commensurate with the biological effects under investigation. Surface dose and depth dose measurements for both neutrons and gamma rays will be made in suitable phantoms. The dosimetry methods proposed can also be used for comparison of the exposure facilities and for more detailed studies in Phase II of this project. The following dosimetry program was proposed after careful consideration had been given to such factors as accuracy, exposure facility time, sensitivity, reproducibility, cost and availability of instruments, fabrication costs, and the use of materials, methods, and geometries that permit theoretical calculations.

The instruments to be used for the gamma-ray measurements are the pocket chamber and film meters presently used for personnel monitoring at ORNL. These will be calibrated under actual exposure conditions with a carbon-wall, CO_2-gas, ionization chamber available at the exposure facility. Since the exposure gamma-to-neutron dose ratio (physical units) is to be 10:1, the contribution of the relatively small neutron responses of the pocket chamber and gamma-ray film will be practically negligible and will be automatically taken into account during the calibration under actual exposure conditions.

Fast-neutron dosimetry will be done principally with a polyethylene-wall, ethylene-gas, proportional chamber connected to a pulse-height integrator. This system is insensitive to gamma rays and gives a reading proportional to dose for neutrons above 200 kev. It will be calibrated with a polonium-beryllium source and compared with a similar but larger chamber with a built-in alpha source. Thermal- and fast-neutron dosimetry will be done with neutron-sensitive personnel-monitoring films calibrated by standard sources.

A Failla-Rossi "tissue-equivalent" chamber for measuring the total dose will be borrowed. Subtracting the gamma ray, the fast-, and the thermal-neutron doses from this total dose will give the intermediate (or epithermal) neutron contribution to the dose. Unfortunately no instrumentation is available for measuring energy loss in tissue other than that which results in ionization.

MEASUREMENTS OF THE VALUE OF *W* FOR ALPHA PARTICLES IN VARIOUS GASES

T. E. Bortner G. S. Hurst

An experiment for the determination of the value of *W* (the number of electron volts required to produce an ion pair) for alpha particles in various gases has been started. The alpha particles of known energy are allowed to expend their energy between parallel plates of an ionization chamber. The source placed directly on one of the electrodes is of such a strength that the charge liberated can produce a voltage drop of 0.1 v on a 0.1073 ± 0.0002-μf fast condenser in about 10 minutes. The actual change in voltage is determined by means of an electrometer,[1] which is used in conjunction with a Rubicon potentiometer as a null indicator. The value of *W* can be computed from the known source strength (particles per minute).

The gas-filling and purification apparatus is shown schematically in Fig. 5. The test gas is admitted into the system through a cold trap and a hot copper purifier. The ionization chamber is closed from the manifold, and continuous purification is achieved by convection over hot calcium.

The results in Table 6 have been obtained for alpha particles from Pu^{239}. These results are preliminary and subject to revision as the work progresses.

Table 6

MEASUREMENTS OF THE VALUE OF *W* FOR ALPHA PARTICLES IN VARIOUS GASES AND GAS MIXTURES

GAS	*W*(ev/ion pair)
Argon	26.2*
Nitrogen	36.3
Methane	29.6
Butane	25.9
Ethylene	28.0
10% argon-90% helium	30.2
30% argon-70% helium	29.8
50% argon-50% helium	20.3
70% argon-30% helium	28.5
90% argon-10% helium	27.3
10% argon-90% nitrogen	35.7
30% argon-70% nitrogen	33.7
50% argon-50% nitrogen	31.5
70% argon-30% nitrogen	29.5
90% argon-10% nitrogen	27.5

*Jesse reports a value of 26.4 for alpha particles in Argon, ANL-4778.

Work is in progress on the determination of *W* for helium and other gases and mixtures of gases.

(1) F. M. Glass, *Nucleonics* (February 1952), p. 36.

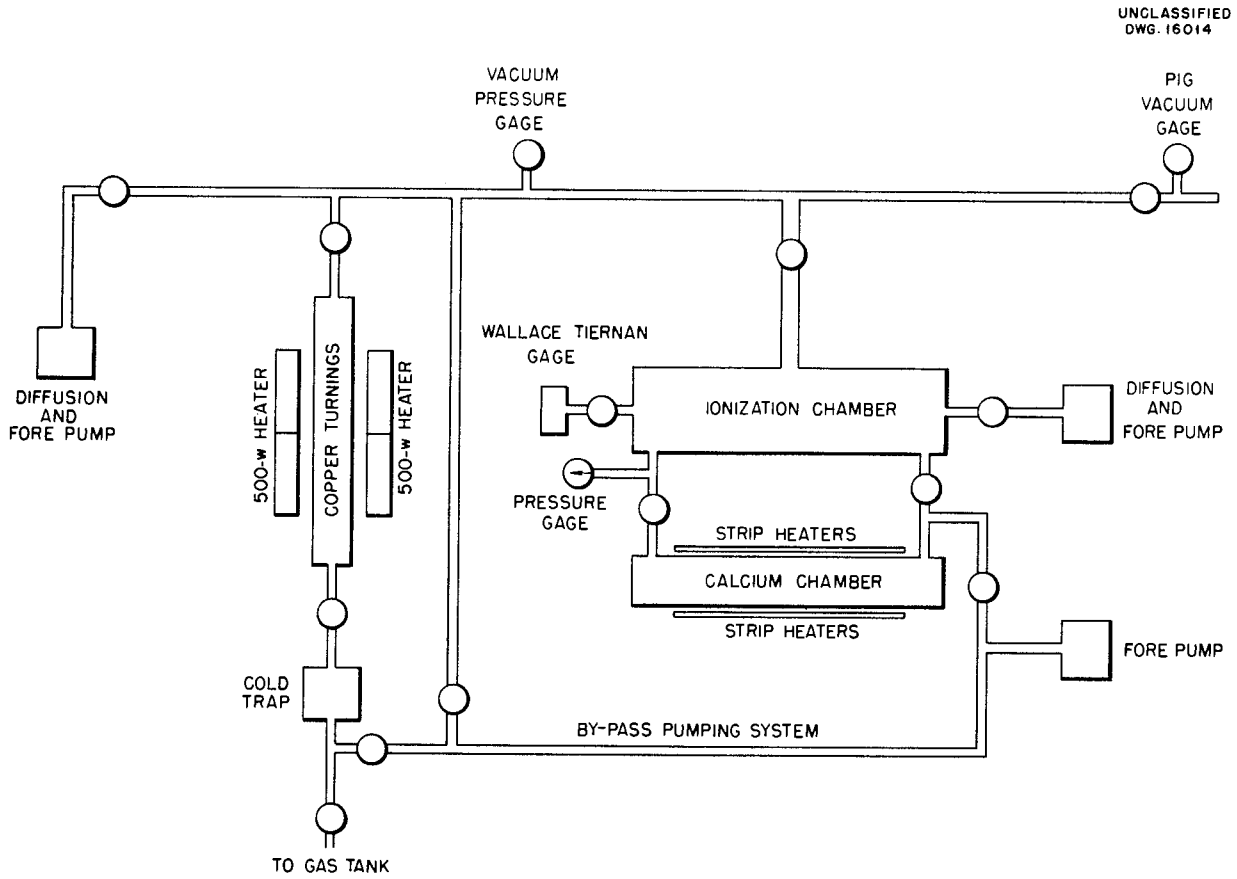

Fig. 5. Block Diagram of Gas-filling Apparatus Used for the Determination of *W*. All circles, unless otherwise designated, are cut-off valves.

PUBLICATIONS AND SPECIAL REPORTS

PUBLICATIONS

1. C. P. Straub and D. A. Pecsok, discussion of paper on "Longitudinal Mixing Measured by Radioactive Tracers," by H. A. Thomas, Jr. and R. S. Archibald, *Proc. Am. Soc. Civil Engrs.*, Separate No. D-84 (June 1952).

2. C. P. Straub, *Public Health Reports* **67**, 298-305 (March 1952).

3. O. W. Kochtitzky and O. R. Placak, *Public Works* **83**, 76 (June 1952).

4. F. P. Cowan, R. A. Love (BNL), and L. B. Farabee, *Am. J. Roentgenol., Radium Therapy, and Nuclear Medicine* **67**, 805-816 (May 1952). (Previously published as AECU-1169.)

5. F. M. Glass and G. S. Hurst, *Rev. Sci. Instruments* **23**, 67 (Feb. 1952).

6. E. P. Blizard, C. E. Clifford, J. L. Meem, R. H. Ritchie, and A. Simon, *Proposal for a Divided Shield for Testing Facilities*, ORNL CF-52-4-85 (April 17, 1952).

7. A. Simon and R. H. Ritchie, *Background Calculations for the Proposed Tower Shielding Facility*, ORNL-1273 (in publication).

8. B. Kahn, *Phys. Rev.* **87**, 175 (July 1952).

9. R. L. Heath and P. R. Bell, *Phys. Rev.* **87**, 176 (July 1952).

10. J. R. Horan and G. A. Boyd, *Phys. Rev.* **87**, 177 (July, 1952).

11. K. Z. Morgan and C. P. Straub, *Phys. Rev.* **87**, 178 (July 1952).

12. I. H. Tipton, *Phys. Rev.* **87**, 179 (July 1952).

13. E. D. Klema, R. H. Ritchie, and T. Arnette, *A Determination of the Diffusion Length of Thermal Neutrons in the X-10 Standard Graphite Pile*, ORNL-1340 (July 30, 1952).

SPECIAL REPORTS

1. M. W. Carter, *Results of an Investigation on the Removal of a Radioactive Isotope (I^{131}) from Sewage by Laboratory Trickling Filters.* (A thesis presented to the Georgia School of Technology in June 1951 and issued as a special report May 1, 1952.)

2. A. G. Friend, *Report on the Investigation of the Removal of Iodine (I^{131}) and Strontium (Sr^{89}) from Water by Ion Exchange Resins.* (A thesis submitted to the Virginia Polytechnic Institute June 8, 1952 and issued as a special report May 19, 1952.)

3. W. J. Lacy, R. H. Dean, and C. E. Graham, *Use of G.M. Survey Meters for Radioactive Water Monitoring* (April 28, 1952). Work performed at ORNL for the Engineer and Research Laboratories, U. S. Corps of Engineers, Ft. Belvoir, Va.

4. O. R. Placak, *Recommendations for the Disposal of Carbon-14 Wastes* (July 12, 1952). Report for the Subcommittee on Waste Disposal and Decontamination, to be published.

5. L. Krumholz and W. T. Miller, *The Second Fall Estimate of the Size of the Fish Population of White Oak Lake, September - October, 1951* (Feb. 5, 1952).

6. L. A. Krumholz and W. T. Miller, *The Second Spring Estimate of the Size of the Fish Population of White Oak Lake, March - April, 1952* (July 29, 1952).

7. F. W. Stead, *Progress in Airborne Radioactivity Surveying* (April 1952). Preliminary report for the U. S. Department of the Interior, Geological Survey.

8. L. F. Garcia, W. C. King, and F. J. Davis, *Variation in the Natural Radioactivity of Air and Water in the Oak Ridge Area.* Paper delivered April 25, 1952 at the USAEC Meeting on Industrial Health.

9. A. D. Warden, *Instrumentation for Monitoring Airborne Activity.* Paper delivered April 25, 1952 in Cincinnati, Ohio, at the USAEC Meeting on Industrial Health.

10. D. M. Davis, J. C. Hart, and K. Z. Morgan, *Aerial Surveying with Light Aircraft for the Detection of Radioactive Contamination on the Ground.* Paper delivered April 25, 1952 in Cincinnati, Ohio, at the USAEC Meeting on Industrial Health.

11. G. S. Hurst and R. H. Ritchie, *Fast Neutron Dosimetry.* Paper presented at the Symposium on the Biophysical and Biological Effects of Neutrons, AEC Division of Biology and Medicine, Washington, D.C., March 17-18, 1952.

12. W. S. Snyder and J. Neufeld, *Maximum Permissible Neutron Flux for Fast and Thermal Neutrons.* Paper presented at the Symposium on the Biophysical and Biological Effects of Neutrons, AEC Division of Biology and Medicine, Washington, D.C., March 17-18, 1952.