MARTIN MARIETTA ENERGY SYSTEMS LIBRARIES
3 4456 0049263 3

ORNL 1160
Progress
9w

INSTRUMENT RESEARCH AND DEVELOPMENT

QUARTERLY PROGRESS REPORT

FOR PERIOD ENDING OCTOBER 20, 1951

CENTRAL RESEARCH LIBRARY
DOCUMENT COLLECTION

LIBRARY LOAN COPY

DO NOT TRANSFER TO ANOTHER PERSON

If you wish someone else to see this document, send in name with document and the library will arrange a loan.

OAK RIDGE NATIONAL LABORATORY
OPERATED BY
CARBIDE AND CARBON CHEMICALS COMPANY
A DIVISION OF UNION CARBIDE AND CARBON CORPORATION
UCC
POST OFFICE BOX P
OAK RIDGE, TENNESSEE

ORNL-1160

This document consists of 15 pages.
Copy 9 of 290 . Series A.

Contract No. W-7405 eng 26

INSTRUMENT RESEARCH AND DEVELOPMENT
QUARTERLY PROGRESS REPORT
for Period Ending October 20, 1951

DATE ISSUED

OAK RIDGE NATIONAL LABORATORY
Operated by
CARBIDE AND CARBON CHEMICALS COMPANY
A Division of Union Carbide and Carbon Corporation
Post Office Box P
Oak Ridge, Tennessee

MARTIN MARIETTA ENERGY SYSTEMS LIBRARIES

3 4456 0049263 3

INTERNAL DISTRIBUTION

1. G. T. Felbeck (C&CCC)
2-3. Chemistry Library
4. Physics Library
5. Biology Library
6. Health Physics Library
7. Metallurgy Library
8-9. Training School Library
10-13. Central Files
14. C. E. Center
15. C..E. Larson
16. S. Cromer (K-25)
17. W. D. Lavers (Y-12)
18. A. M. Weinberg
19. E. H. Taylor
20. E. J. Murphy
21. E. D. Shipley
22. C. S. Harrill
23. F. C. VonderLage
24. R. C. Briant
25. J. A. Swartout
26. S. C. Lind
27. F. L. Steahly
28. A. H. Snell
29. A. Hollaender
30. M. T. Kelley
31. K. Z. Morgan
32. J. S. Felton
33. A. S. Householder
34. C. E. Winters
35. D. W. Cardwell
36. E. M. King
37. L. M. Reynolds
38. W. J. Ladniak
39. P. R. Bell
40. C. J. Borkowski
41. W. M. Hurst
42. W. H. Jordan
43. R. S. Livingston
44. E. E. Fairstein
45. J. W. Morfitt
46. C. W. Sheppard
47. W. G. Stone
48. D. D. Cowen
49. C. P. Keim
50. C. D. Susano
51. P. M. Reyling
52. M. J. Skinner
53-56. Central Files (O.P.)

EXTERNAL DISTRIBUTION

57-290. Given distribution as shown in TID 4500 under Instrumentation Category.

TABLE OF CONTENTS

	PAGE
PHYSICS DIVISION	1
Single-Channel Analyzer	1
Multichannel Analyzers	1
Descriminator-Tube Drifts	1
Scaler Improvements	2
CHEMISTRY DIVISION	4
Scintillation Counter with High Gamma-Counting Efficiency	4
HEALTH PHYSICS DIVISION	7
Instrumentation and Techniques	7
INSTRUMENT DEPARTMENT	8
Van de Graaff Group	8
Flow-Modulated Induction Flowmeter	8
Current Integrator Q-1183	9
Resonance Analyzer	9
Cryostat Controller	10
Instrument Construction and Maintenance	12

INSTRUMENT RESEARCH AND DEVELOPMENT QUARTERLY PROGRESS REPORT

PHYSICS DIVISION

Single-Channel Analyzer (J. E. Francis). Twelve of the analyzers reported previously (404A tubes in amplifier and discriminator) have been built by the Instrument Division and are in the process of being checked. Parasitic oscillations were encountered at some points and necessitated the addition of suppression resistors at strategic points. Modified circuit diagrams are now available. These analyzers show practically constant window width for all pulse heights when tested with a signal generator designed to produce pulses of shape similar to that obtained from the usual particle detectors. Many single-channel analyzers that work very well on square-top pulses, show a big variation when tested in the foregoing manner.

Multichannel Analyzers (G. Kelley, P. R. Bell, C. G. Goss). Two 10-channel analyzers have been in operation for several months and have proved very useful. Except for occasional scaler failures they have operated quite reliably. Nevertheless the research has been somewhat impeded by the limitation on integral counting rate. Circuit modifications have been made that decrease the resolving time from 10 to 7 μsec. Even so the maximum counting rate that can be used is about 5000 counts/sec. The analyser continues to operate at higher counting rates, but the spectrum becomes distorted. This defect is characteristic of most multichannel analyzers and results from using a gated amplifier. The window amplifier must be turned off during the time that a pulse is being analyzed. If a pulse arrives during the interval of turning the amplifier back on, or if the tail of a pulse is present at this time, a count will be recorded in the wrong channel. Thus the counting rate must be kept low enough so that such a situation arises very infrequently.

The foregoing considerations have prompted the design of a new pulse-sorter chassis that operates on a different principle. When a pulse arrives at the window amplifier it is stored for 2.4 μsec. If during this time no other pulses have arrived, the original pulse will be analyzed as it comes out of the delay line. This circuit is called an "inspector circuit." This scheme avoids the necessity of using a gated amplifier and hence does not encounter the difficulties described above.

The scheme for analyzing the pulse from the window amplifier is also changed considerably from the previous models. The pulse is lengthened and then analyzed by a group of long-tailed-pair discriminators. A simple anti-coincidence circuit is used for determining the highest channel that was triggered by the pulse. The whole process is over in 2.6 μsec and the analyzer is ready to receive the next pulse. This pulse sorter is faster and more reliable than the one used previously; in addition the circuit is considerably simplified, so much so that a 20-channel analyzer is now being planned to fit into a 6-ft relay rack.

Discriminator-Tube Drifts (G. G. Kelley and C. G. Goss). Analyzers of the type described in the previous section require discriminators that do not drift appreciably. Tests have

been made to determine which tubes are most suitable in this respect. A long-tailed-pair arrangement was used, with the grids being held at fixed potentials that were chosen equal to the grid potentials actually obtaining in a discriminator at the instant of firing. The difference in the plate currents was recorded on a strip chart. Tests on various pairs of tubes were run over a period of six weeks. The data shown in Table 1 were taken from these strip charts.

The maximum deviation in plate current was determined for each day and for each week. This figure was converted to equivalent change in potential of one of the grids of the pair. Column 3 is the average of the daily excursions expressed in millivolts of grid change. Column 4 is the average of the weekly excursions. It appears that the 12AT7 and 6AU6 tubes are somewhat better than the 6AK5 or 5654 tubes. Even the 5654-tube drift of about 30 mv/week would amount to only a 1% change in the "window width" of the analyzer.

Scaler Improvements (P. R. Bell, C. G. Goss, G. G. Kelley). The scaler in the multichannel analyzers use 12AT7 tubes and fail by "scaling through" as the tubes age. This type of failure is characteristic of Higinbotham scalers when tubes are used that have a short grid base, i.e., tubes which are cut off with only a small negative grid voltage. Consider the following situation in a group of three scaling stages: the first scale in the 0 position, the second scale in the 0 position, and the third scale in the 1 position. As the first scale flips to the 1 position, the third scale may be flipped. This undesirable situation is caused by the release of diode current from the plate of the "off" tube of the second scale producing a small positive surge at the grid of the "on" tube of this scale and a corresponding negative pulse at its plate. Since this plate bears the coupling diodes and is already down, one of the diodes is already pulling at the plate of the third scale and is in position to deliver the full impulse presented. When coupling diodes deliver the normal pulse they are not already pulling down and must therefore go down some distance before they begin to function. This discriminates in favor of the unwanted pulse.

Two means have been adopted to prevent failure of this type: the use of a long grid-base tube, such as

TABLE 1

Plate-Current Excursions

RUN NO.	TUBE TYPE	AVERAGE DAILY EXCURSION (mv)	AVERAGE WEEKLY EXCURSION (mv)
1	12AT7	12	17
2	12AT7	6.6	18
3	6AU6	8.1	15
4	6AU6	5.6	9.2
5	6AK5	6.5	22
6	5654	10.9	31

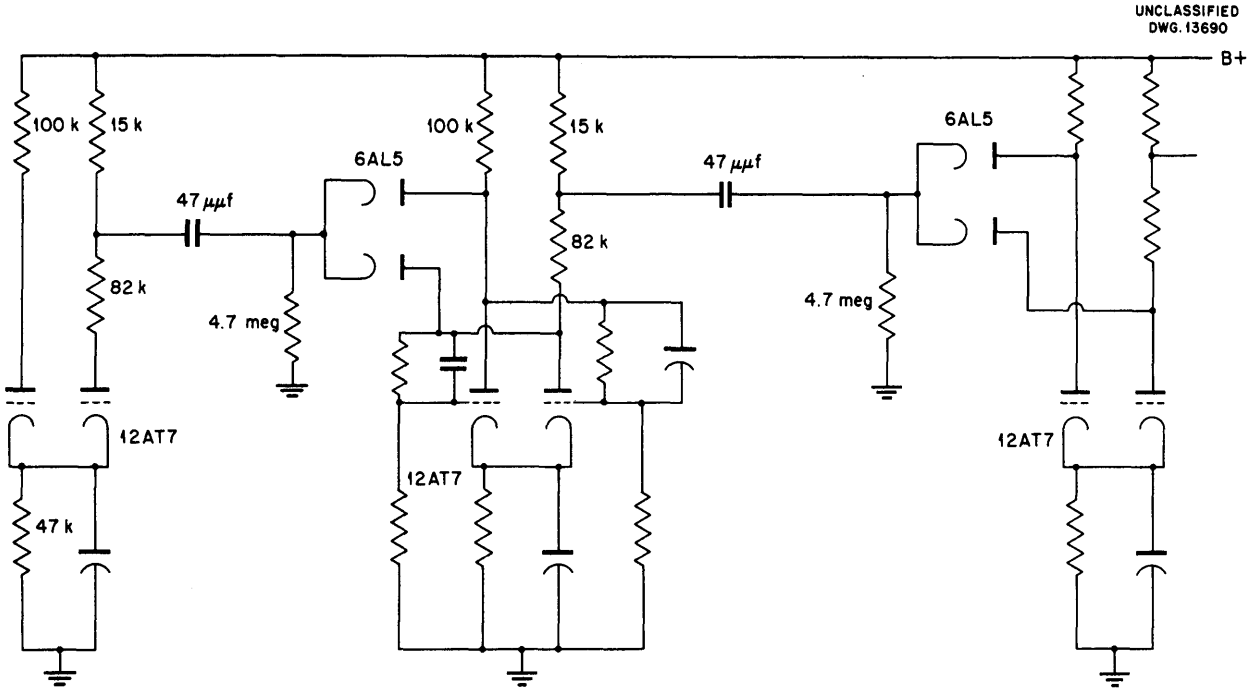

Fig. 1. Higinbotham-Type Scaling Stage Modified to Reduce Scale-Through Errors Using High Mu Tubes.

the 6AU7 tube in place of the short grid-base tube; and the addition of a coupling condenser and "drooler" resistor between the plate-division resistors and the coupling diodes (see Fig. 1). With this arrangement the coupling diodes are always pulling down, so the normal pulse is no longer discriminated against. Thus a considerably larger division ratio can be used, thereby reducing the size of the normal and unwanted pulse. The "droller" resistor must be small enough for the coupling condenser to reach equilibrium in a time shorter than the resolving time of the scaler.

INSTRUMENT RESEARCH AND DEVELOPMENT REPORT

CHEMISTRY DIVISION

C. J. Borkowski

Scintillation Counter with High Gamma-Counting Efficiency. Full exploitation of the high intrinsic efficiency of scintillation counters for the detection of gamma rays requires that a crystal must be used that has a high density, preferably a high atomic number, a large light output per unit gamma-energy loss in the crystal, and good optical properties. At present only sodium iodide activated with thallium iodide meets these requirements. Measurements made on several type-5819 photomultipliers and sodium iodide crystals indicate that about 400 ev gamma-energy loss in the crystal is required to release a single photoelectron from the photocathode. Since the number of dark current pulses is practically zero at a bias setting corresponding to ten photoelectrons, at this bias all Compton electrons and photoelectrons are counted that exceed an energy of 4 kev. The number of pulses corresponding to 4 kev or less is small, so a plateau or at least a region of minimum slope should be observed in an integral bias curve. Figure 2 shows the plot of the counting rate as a function of the photomultiplier voltage for various energy gamma rays using a sodium iodide crystal 1½ in. in diameter and 2 in. long. At a voltage corresponding to a bias of 20 kev the counting rate is rather insensitive to photomultiplier voltage variations of the order of a few per cent. Thus reproducible counting can be done over long periods of time.

Description of scintillation counter. It is believed that whenever possible all measurements of radioactivity should be made by gamma counting of liquid or solid samples. The counter designed for this purpose

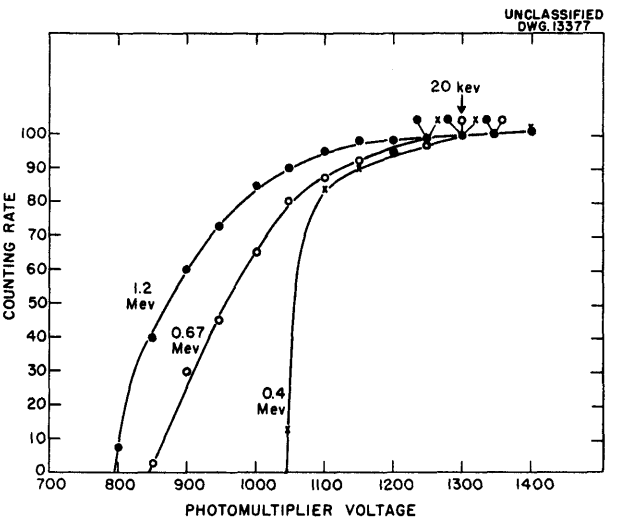

Fig. 2. Counting Rate Voltage Plateau for the High-Efficiency Gamma Scintillation Counter.

(Fig. 3) is similar in principle to the calcium fluoride counter described in ORNL-607.[1] The sodium iodide crystal is 1½ in. in diameter and 2 in. long and has a concentric 5/8-in. hole 1½ in. deep drilled in it. The end of the crystal is machined to fit the curvature of the photocathode of the type-5819 photomultiplier. Silicone high-vacuum grease is used to optically couple the crystal to the photomultiplier. Powdered magnesium oxide is used as a reflector for all sides of the crystal. An aluminum housing fits over the crystal and the pnotomultiplier, and is hermetically sealed to the glass envelope with Apiezon Q. A brass or stainless steel can is slipped over the aluminum housing to prevent contamination of the assembly if a sample is spilled.

---

[1] R. S. Stone and C. J. Borkowski, "Calcium Fluoride as a Scintillation Counter," *Chemistry Division Quarterly Progress Report for Period Ending December 31, 1949*, ORNL-607, p. 168.

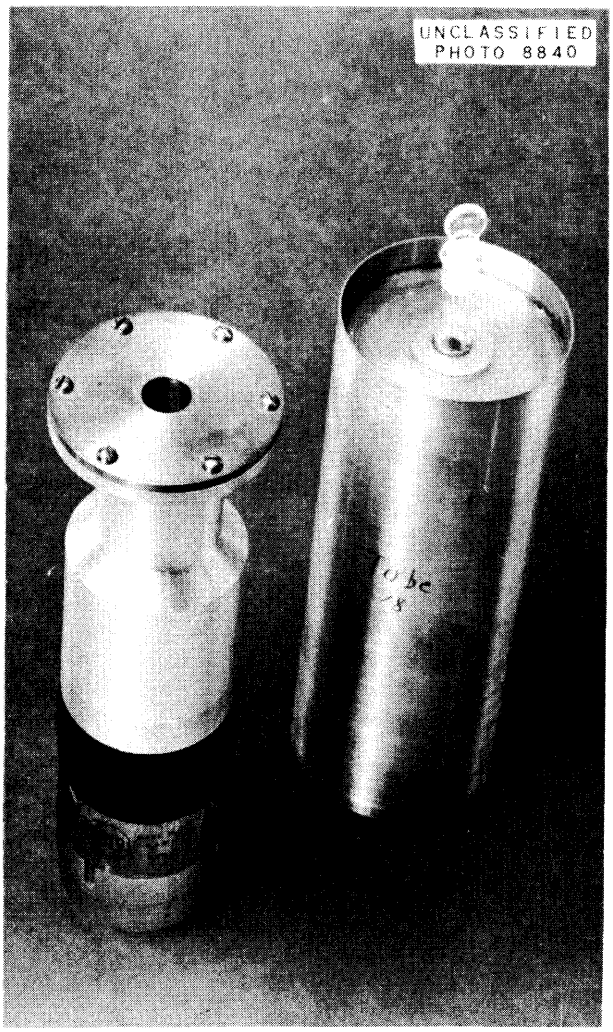

Fig. 3. Scintillation Counter.

To prevent the contamination of the hole by test tubes that have external contamination, an aluminum foil liner or plastic insert is used. Two-ml glass test tubes are used for sample containers. The photomultiplier is connected to a nonoverloading amplifier with 10-mv input sensitivity and 0.3-μsec rise time. A positive high-voltage supply is obtained from a standard G-M scale of 64.

Figure 4 shows the gamma efficiency of this counter as a function of energy. It can be seen that the

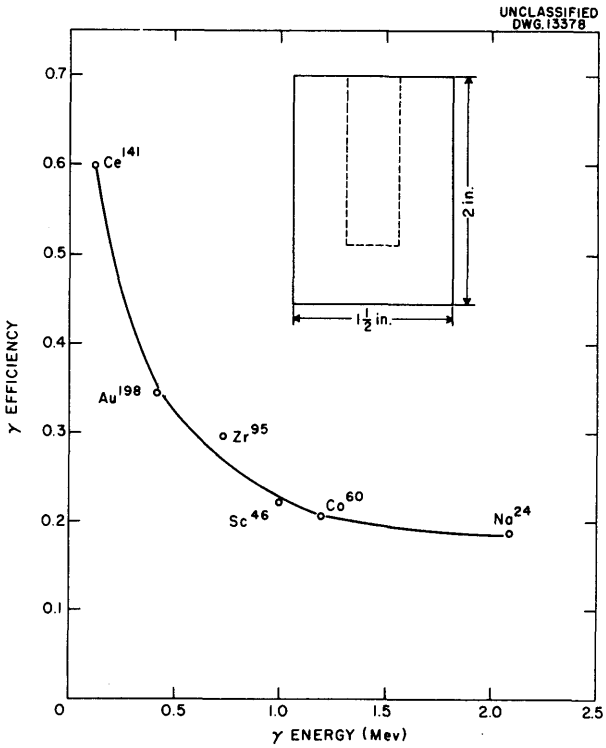

Fig. 4. Gamma Efficiency of NaI-TlI Scintillation Counter.

gamma-counting yield is as high or higher than conventional beta-counting yields using end-window G-M counters. If two gammas per disintegration are emitted, e. g., as in cobalt-60, the counting yield is not doubled because both gammas are simultaneously absorbed in the crystal and only one pulse is obtained. Thus, if the efficiency for one gamma is 20%, the combined efficiency is 0.2 + 0.2 - (0.2 X 0.2), or 36%.

The high gamma-counting yield, the reproducible geometry, and particularly the ease of sample preparation make this counter exceedingly useful. Three such counters have been in use for a period of four months with no change in their characteristics, indicating that the reflective properties of the sodium iodide crystal surface were not changing and hence a hermetic seal was obtained.

Some energy discrimination is possible with this counter as can be seen from Fig. 2. By adjusting the photomultiplier voltage to 1030 v, no gammas below 0.4 mev will be counted, and yet 80% of a 0.67-mev gamma will be counted. The energy resolution of the crystal is impaired by the concentric hole. For example, the crystal before the hole was drilled in it gave a 9.0% full width at one-half maximum for a 0.67-mev gamma ray. After drilling the hole the width increased to 15%.

With 2 in. of lead shielding the background at 20 kv bias is 200 c/min.

HEALTH PHYSICS DIVISION

Instrumentation and Techniques (J. M. Garner, R. A. Lauderdale). Developmental work on a column-type of water monitor for use in the detection of low levels of activity is nearing completion and a report on this instrument is being prepared. The unit, which consists chiefly of a 10-in., thin-walled (30 mg/cm^2), glass GM-tube surrounded by a bed of Dowex-50 cation-exchange resin, operates by concentrating the radioactive elements from large volumes of water passed through the bed. The buildup of activity in the resin bed is recorded on a strip chart as a line of constant slope for each concentration of activity. The slope of the line is therefore a measure of the concentration of activity in the water.

This water monitor unit was calibrated by the use of tap water spiked with different concentrations of an aged, mixed fission-product solution having an average β^- energy of about 0.7 Mev. From the data obtained, it has been calculated that activities as low as 10^{-9} μc/cc of mixed fission-product activity can be detected by passing 40 gal of water through the unit. By plotting the known activity of the feed as a function of the slope of the recorded line in counts per minute per liter a straight line was obtained that may be represented by an equation of the type

$$\mu\text{c/cc in feed} = \frac{1}{K} \times \text{recorded c/m/liter}$$

where K is essentially a counting efficiency correction that will depend on the dimensions of the detector assembly and on the energy and type of radiation.

INSTRUMENT DEPARTMENT

Van de Graaff Group. (H. E. Banta, R. W. Bennett, R. F. King, A. W. Prichard, J. P. Judish). The development of a pneumatically operated vacuum valve has been completed, and one of these valves was installed. It is planned to install such valves on all accelerator pumping systems so that an accidental loss of vacuum will result in automatically closing off the diffusion pumps, thus protecting them from damage.

Much consideration has been given to a stabilizing system for the Van de Graaff generator, and a system has been designed and is now under construction.

The Van de Graaff generator has been operated as a positive-ion accelerator, with a resolved proton beam of 100 μa and a maximum voltage of 2.6 million.

Zirconium deuteride targets of several thicknesses have been prepared. The technique for the production of zirconium tritide is being developed.

Consideration is being given to the general problem of control systems for the Van de Graaff generator. Detailed plans for such systems will be completed before moving into the new accelerator building approximately six months hence.

Flow-Modulated Induction Flowmeter. (W. G. James). Induction flowmeters using a-c magnets have been discussed in previous progress reports. A paper was presented on this subject at the National Instrument Conference & Exhibit in Houston, Texas, September 11, 1951. These flowmeters have suffered from the fact that a background voltage is induced in the liquid by transformer action of the alternating magnetic flux, even when the liquid is at rest. This makes it difficult to measure very low flow rates or flow rates of very low conductivity liquids. This background voltage can be eliminated by modulating the flow instead of the magnetic flux. With a modulated flow, it is possible to use a permanent magnet and still get an a-c signal with all of its advantages. Furthermore, since there is no background voltage, a much smaller signal can be detected; therefore, a much smaller flow can be measured. Also, an amplifier having a much higher input impedance can be used, since there are no alternating voltages or magnetic fluxes to couple to the amplifier input. This permits measurement of flow rates of liquids having very low conductivity.

The probable disadvantages of flow modulation are that the modulator is probably not as reliable as an a-c electromagnet and the signal voltage is not linear with flow rate.

A flow modulator has been built that is essentially a motor-driven stopcock. This effectively gives 100% modulation of the flow and causes a minimum of disturbances in the liquid when the flow is zero. An amplifier has been built that has an input resistance of 10,000 megohms so that low-conductivity liquids can be investigated.

Flow measurements have been made using tapwater. The background noise corresponded to about 0.1 ml/min, and this was the amplifier noise, not noise in the detector tube. This is about ten times as good as previously described induction flowmeters, and it can possibly be pushed lower. To assure that operation was independent of liquid conductivity, butyl alcohol was first tried and found to have approximately the same calibration as

tap water. Mineral oil was next tried but was found to have too little conductivity.

Tests are to be made to determine the limit on conductivity and the linearity of signal vs. flow. Also, an attempt will be made to measure air flow by first subjecting the air to a source of radiation so that it will contain some free ions and thereby be effectively conductive.

Current Integrator Q-1183 (F. J. Rink). The current integrator is a device for the time integration of currents in the range of 10^{-12} to 10^{-3} amp in decade subranges. The maximum allowed error is 1% for operating periods down to 1 minute. The instrument is designed to permit operation with an ungrounded input circuit; this is accomplished by arranging the instrument to respond only to the difference of potential between input terminals. The potential difference across the input is less than 1 v over all ranges, and the input circuit may be operated at several hundred volts with respect to ground. An electrometer circuit operating in a null-balancing servo loop provides a signal that is proportional to input current for each range. The accumulated integral is obtained through use of a conventional watt-hour meter movement and is indicated on a register.

Resonance Analyzer (W. G. Stone). In all models of the resonance analyzer previously tried, one essential element was a frequency-selective system capable of good rejection of a signal differing in frequency from the desired signal by only 1 part in 1600. No great difficulty was found in producing such a circuit either by means of a crystal filter or by positive feedback in an L-C system. In both cases, however, the gains of the system became increasingly uncertain as the selectivity was increased. Tests were made of many systems and none was found in which the selectivity was high enough. The gain was stable to 1%, even for relatively short periods of time.

It is possible to design an elaborate calibrating system by which the gain of the amplifier and frequency selector may be determined simultaneously with the measurement of the desired signal from an ion. Such a system would materially increase the cost of the finished product and would make its operation difficult. For this reason it was decided to consult the Mathematics Panel to try to determine whether it is intrinsic that increase of selectivity must be accompanied by loss of gain stability. A. S. Householder was most cooperative and arranged for us to consult J. W. Tukey of Princeton when he came to Oak Ridge.

Tukey stated that it is in line with the law of information that gain stability should decrease as frequency selectivity is increased, but that a critical analysis of this might be very difficult. He suggested that the difficulty might be avoided by the system shown below in block diagram. The principles outlined by Tukey have been carried a little further than he suggested, although the general method remains the same. Below is a block diagram of the system as now constructed.

Signals giving full-scale deflection on a 100-μa meter have been detected, and preliminary results are very encouraging. The sharpness of tuning is more than adequate but no measurements have as yet been made as to accuracy of measurement of signal-strength determinations. Many details need to be ironed out before extensive tests can be made.

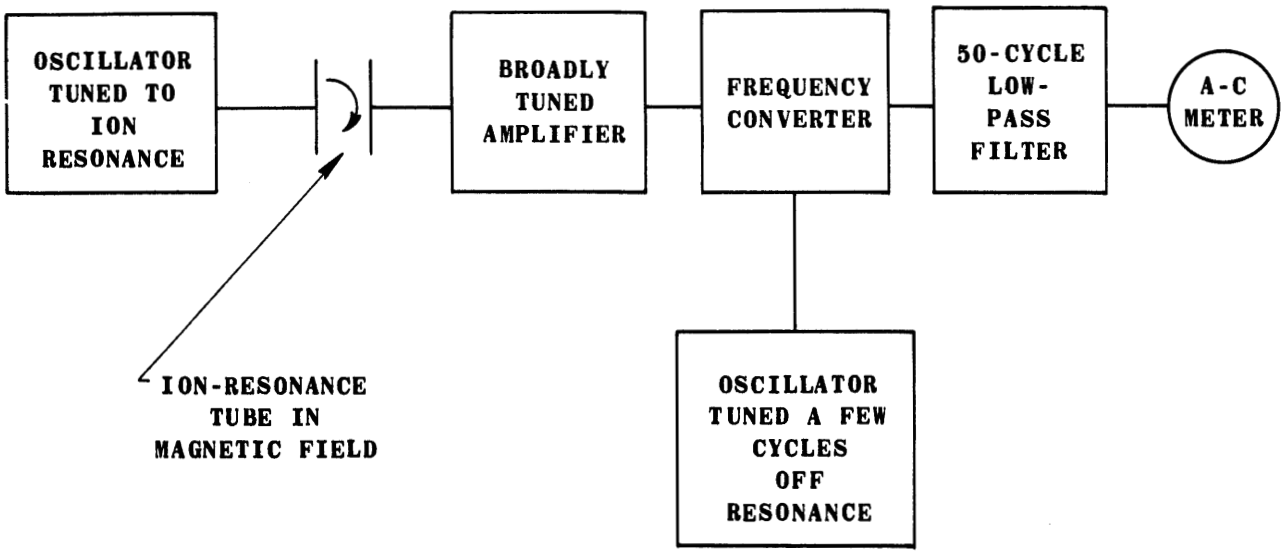

Block Diagram of Resonance Analyzer

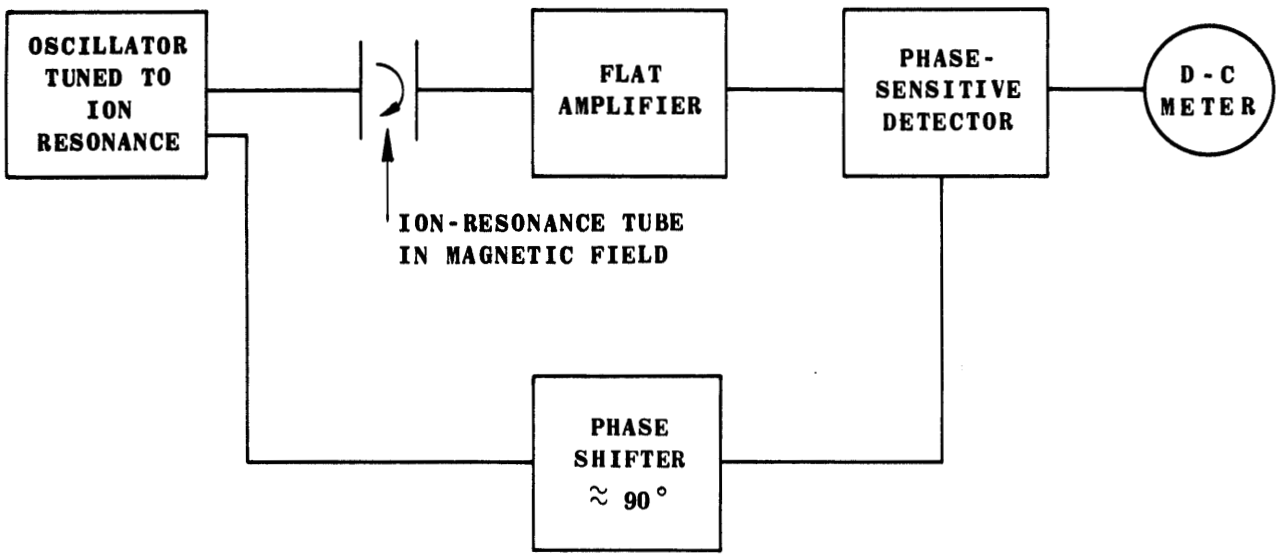

Block Diagram of Modified Resonance Analyzer

This system was discussed in some detail with D. H. Wilkinson of Cambridge on his recent visit. He had no suggestions to offer, but said it looked to him off-hand as though it was pretty well under control. He did say that the name "Microtron," which was suggested by Tukey for this device, had already been applied to an electron accelerator.

Cryostat Controller (T. M. Gayle). A study of the electrical resistance of certain metals at low temperatures

was undertaken by G. E. Evans of the Physics Division late in 1950. Continuous recording of temperature together with fully automatic control and program control was desired for a range of -178 to + 30°C. A Brown strip-chart-recorder pneumatic controller was purchased with a range of -220 to + 50°C for a copper-constantan thermocouple. It was decided that the control of temperature throughout this range could best be realized through the continuous regulation of two inert-gas flows. One of these flows was cooled to approximately -230°C by a liquid-nitrogen bath and the other was taken at ambient temperature. The gases were mixed prior to entering the sample test cell and the cell temperature was dependent on the ratio of one gas stream to the other as well as to heat losses from the cell itself. These stray heat losses could not be calculated, however, and Evans originally estimated that the ranges of flow should fall within 1 to 100 cc/min. Since the exact flow rates were still somewhat problematic, it was decided to provide for each stream a valve with as wide a range of control as possible. This was accomplished through the use of Foxboro Bourdon restrictors as valve-control elements. One of the units was assembled for direct actuations and the other for reverse actuations; both being energized from a single temperature controller. The use of these restrictors is definitely recommended for consideration in the control of gas-flow rates between 2.0 and approximately 5000 cc/min. Their completely packless design together with small size further enhance their use in many installations. Smooth action together with linear travel is difficult to attain in a standard control valve.

After preliminary runs and various laboratory changes, it was desired to increase flow rates of each line to approximately 50 standard cubic feet per hour. This flow rate was too high for the restrictors, and two 1/2-in. Mason-Neilan valve plugs were machined and provided to cover this range.

After a number of preliminary runs, work was directed toward developing a program controller to drive the set point of the pneumatic controller. Construction of a suitable program controller was somewhat difficult due to special requirements. The instrument scale was quite non-linear (as is the output of the copper-constantan thermocouple in the range used), and the program desired called for a drive of degrees centigrade per unit time. A time drive for full-scale instrument travel was desired for values for 15 min to 3 hr. Driving the set point with a servo system seemed the most logical approach. A servo motor was mounted on the instrument-case door and the feed-back slide-wire (a ten-turn helipot) was geared to the set-point linkage. As the instrument-case door was closed, the servo motor made contact with the set-point cable drum through a friction clutch.

The feed-back slide-wire was in reality half of a Wheatstone bridge, the remaining half being the actuating side. The amplifier sensed the unbalance and drove the set-point range to balance through the servo motor. Rotation of the transmitting slide-wire would then cause a similar rotation of the feed-back slide-wire as well as travel of the set point. Compensation for the nonlinearity of the scale would then be made in the rotation or movement of the center leg of the transmitting slide-wire.

The ultimate and most satisfactory solution was found in designing an electrical function generator. By loading the floating arm of the linear potentiometer, various exponential functions can be generated depending

on the ratio of the shunt to the potentiometer resistance. Further, by making this shunt variable and actuating it from the same medium as the shunted potentiometer, practically any function can be simulated by selection of the proper gear ratio between the "shunted" and the "shunting" resistances. The nonlinear scale of the instrument was matched to within 1% by the use of two helipots in a 1:1 ratio. More accurate matches are easily attained should they be necessary. At this point the only remain-problem was to drive the transmitting slide-wire at the speeds required.

The method finally adopted was of the mechanical-pulsing type. A 25-rpm synchronous motor was used to drive a raised face cam. A microswitch, which controlled the potentiometer drive motor, was engaged once every revolution of the cam. The position of the microswitch determined the on-time to off-time ratio during the cycle. This could be varied from 0 to 100% by appropriate positioning of the microswitch. This microswitch position was mechanically geared to a ten-turn helipot dial, and accurate reproducible settings were made possible. Since the cycle time was less than 3 sec, a very close approach to continuous drive was provided. The Brown Instrument Company has plans to market a program controller for their strip-chart recorders. However, it will be of a single-speed type only and will not be adaptable to nonlinear-scaled instruments. This will undoubtedly limit its use. Leeds & Northrup can provide linearized slide-wires to give a linear scale for any thermocouple used. This would definitely be of value where program control is anticipated. It is hoped that experience gained in the development of the program controller described here will be of material value to any future program-control requirements.

Instrument Construction and Maintenance (W. J. Ladniak). The following instruments were built in the Instrument Fabrication Shop for use in research work:

Monitrons	1
Electrometer	1
Coincidence circuit	1
Differential discriminator	6
Servo amplifiers	1
Precision pulser	1
Condenser welder	1
Voltage divider	1
Scintillation counter	2
D-c amplifier	6
Magnet current supply	1
Power supply	1
Polaragraph	1
Total	24

In addition to the above instruments, 8 Geiger-Mueller probes were built for Health-Physics survey work. These probes were used with scalers, count-rate meters, and other types of instruments. The servicing report is as follows:

MONTH	NO. OF INSTRUMENTS SERVICED	NO. OF FAILURES
July	321	693
August	172	575
September	156	548
Total	649	1816

The percentages of instrument failures due to various causes were:

	% OF TOTAL
Transformers replaced	1.35
Geiger-Mueller tubes replaced	6.88
Filter-condensers replaced	3.48
By-pass condensers replaced	1.42
Resistors replaced	1.94
Vacuum tubes replaced	37.48
Instruments calibrated	2.52
Miscellaneous	44.93
	100.00