[redacted]

MARTIN MARIETTA ENERGY SYSTEMS LIBRARIES

3 4456 0352724 4

ORNL 980, Series A
Chemistry-Transuranic
Elements 9a

DRY FLUORIDE PROCESS STATUS REPORT

LABORATORY RECORDS
1954

R. E. LEUZE

CENTRAL RESEARCH LIBRARY
DOCUMENT COLLECTION

LIBRARY LOAN COPY

DO NOT TRANSFER TO ANOTHER PERSON

If you wish someone else to see this document, send in name with document and the library will arrange a loan.

OAK RIDGE NATIONAL LABORATORY
OPERATED BY
CARBIDE AND CARBON CHEMICALS DIVISION
UNION CARBIDE AND CARBON CORPORATION
POST OFFICE BOX P
OAK RIDGE, TENNESSEE

[redacted]

[redacted]

Report Number: ORNL-980
This document consists of 36 pages.
Copy 9 of 112, Series A.

Contract No. W-7405, eng 26

CHEMICAL TECHNOLOGY DIVISION

LABORATORY SECTION

DRY FLUORIDE PROCESS STATUS REPORT

R. E. Leuze

Experimental work by:

H. B. Graham
A. B. Green
C. P. Johnston
R. E. Leuze

DECLASSIFIED

CLASSIFICATION CHANGED TO:

BY AUTHORITY OF: TID-1148

BY: R. Morrison 7/11/57

DATE ISSUED

MAR 27 1951

OAK RIDGE NATIONAL LABORATORY
Operated by
CARBIDE AND CARBON CHEMICALS COMPANY
A Division of Union Carbide and Carbon Corporation
Post Office Box P
Oak Ridge, Tennessee

[redacted]

[redacted]

[redacted]

MARTIN MARIETTA ENERGY SYSTEMS LIBRARIES

3 4456 0352724 4

Contents

		Page No.
1.0	Abstract	5
2.0	Introduction	6
3.0	Summary	7
4.0	Preparation of UF_6 from Uranium Metal	8
4.1	Fluorination Equipment and Procedure	9
4.2	Fluorination Results	10
5.0	Adsorption of Fission Products and Plutonium	11
5.1	Adsorption on Copper	12
5.2	Adsorption on Alundum	13
6.0	Filtration of Uranium Hexafluoride	14
6.1	Filtration Equipment and Procedure	14
6.2	Filtration Results and Discussion	15
7.0	Resublimation of Uranium Hexafluoride	16
7.1	Sublimation Equipment and Procedure	16
7.2	Resublimation Results and Discussion	17
8.0	Overall Results	17
9.0	Recommendations	19
9.1	Preparation of Uranium Hexafluoride	19
9.2	Adsorption Techniques	19
9.3	Distillation Studies	19
9.4	Phase Diagram	20

[redacted]

[redacted]

[redacted]

Contents (continued) Page No.

9.5 Filtration 20

9.6 Equipment Development 20

10.0 Bibliography 21

Tables

1. Removal of Plutonium and Fission Products from Uranium by Fluorination 22

2. Removal of Plutonium and Fission Products from Gaseous UF_6 by Adsorption on Copper 24

3. Removal of Plutonium and Fission Products from Gaseous UF_6 by Adsorption on Alundum 25

4. Removal of Plutonium and Fission Products from Gaseous UF_6 by Filtration 26

5. Removal of Plutonium and Fission Products from UF_6 by Batch Sublimation 27

6. Overall Results for Dry Processing 28

7. Purity of UF_6 after Dry Processing 30

Figures

1. Schematic Diagram for Dry Fluoride Experiments 32

2. Fluorinator Assembly 33

3. Copper Adsorption Trap 34

4. Alundum Adsorption Bed 35

5. Filtration Assembly 36

1.0 Abstract

Uranium hexafluoride was prepared by the direct combination of irradiated uranium metal with elemental fluorine and subsequently decontaminated by adsorption, filtration, and sublimation on a laboratory scale.

[redacted]

2.0 Introduction

Early in project history, a dry fluorination method[1,6] was considered for separating uranium from fission products, plutonium, and other transuranic elements. This method consisted of converting uranium to the hexafluoride and effecting the separation by distillation; however, it was necessary to place the major effort on other processes which would require less development time. It now seems desirable to make a thorough evaluation of fluorination methods since they offer the following advantages over the present wet processes: (1) smaller equipment with few or no moving parts is required; (2) the waste volume is minimized since fluorine is the only major chemical used; (3) fission products are obtained in a concentrated form making them easily recoverable; (4) the uranium is recovered as UF_6 which requires a small storage volume and which is the feed material for the isotopic separation plants; (5) it may be possible to process short cooled material, thus reducing the uranium inventory requirements. There are two outstanding limitations to this type process: (1) the high cost of fluorinating agents and (2) the danger involved in handling volatile radioactive materials.

Before a dry fluorination process for decontaminating uranium and plutonium may be seriously considered, the actual separations obtainable must be demonstrated. Fluorination, copper adsorption, Alundum adsorption, filtration, and resublimation were investigated as methods of separating uranium from plutonium and fission products. These serve as preliminary studies upon which a future program can be based.

3.0 Summary

The plutonium content of UF_6 prepared from uranium metal irradiated 335 days in the ORNL pile and cooled 30 months was reduced to <1 Pu α ct/m/mg U by passing the UF_6 through a bed of Alundum, and then either filtering or resubliming the product. Fission product beta activity in the same material was reduced to 1 - 50 cts/m/mg U by filtering and resubliming the UF_6.

Alundum adsorption was the most effective means of removing plutonium from UF_6, giving separation factors of 13-96 and rendering that plutonium passing through the bed non-volatile so it could be removed by filtration or resublimation. Plutonium separation factors for the other steps were: fluorination, 1.1 - 2.4; copper adsorption, 1.1 - 74; filtration not preceded by Alundum adsorption, 1.4 - 4; and resublimation not preceded by Alundum adsorption, 1.3 - 290.

Filtration of UF_6 through barrier backing at 70°C was the most effective method of removing the fission products and gave a beta decontamination factor of 10^3. Because of the larger amount of ruthenium passing through the filter at 230°C, the fission product beta decontamination factor was only 300. Filtration, however, has two limitations: (1) it does not remove volatile fission product fluorides, and (2) the barrier backing cannot be satisfactorily dried after washing it free of plutonium and fission products. Other beta decontamination factors were: resublimation, 12-330; fluorination,

Summary (continued)

2-13; Alundum adsorption, 1.4; and copper adsorption, 1.1.

Uranium losses were 1 - 3% for Alundum adsorption, 1 - 24% for resublimation, and 0.3% for fluorination, copper adsorption, and filtration. The losses in Alundum and resublimation may be reduced by improved operating techniques.

The program proposed for the immediate future includes (1) a survey of other methods of preparing UF_6 from uranium metal, (2) a study of adsorption techniques for removing plutonium from UF_6, and (3) an investigation of fractional distillation for removing the volatile fission product fluorides from UF_6.

4.0 Preparation of UF_6 from Uranium Metal

Uranium metal may be converted to uranium hexafluoride by several different methods. The metal may be reacted with hydrogen to give uranium hydride which can then be reacted with anhydrous HF to give UF_4[3]. This UF_4 is then reacted with fluorine to produce UF_6.

Uranium metal reacts with the interhalogens, ClF_3 and BrF_3, to give uranium hexafluoride. Uranium may also be combined directly with elemental fluorine to produce UF_6[2]. These various methods have certain advantages and disadvantages which will not be discussed here. The direct combination of fluorine with uranium was used to produce UF_6 in these laboratory experiments because of its convenience and not because it was felt to be superior to the other procedures.

4.1 Fluorination Equipment and Procedure

Fluorine was transferred from cylinders through a bed of sodium fluoride to remove HF and then through a monel, Hoke needle valve and a glass rotameter into the fluorinator (Figure 1). The fluorinator was a cup made from a 2 inch piece of 1-1/2 inch nickel tubing (Figure 2). The cup was placed in a stand fabricated from a stainless steel flange and stainless steel pipe. The fluorinator top was a disc of nickel sheet with a fluorine inlet and a UF_6 outlet. This assembly was sealed between stainless steel flanges using an aluminum wire gasket. A conical electric heater was used to bring the reactor and uranium metal up to temperature.

The aluminum jacket was removed mechanically from a 40 - 250 gram piece of slug irradiated in the ORNL pile. The oxide film was removed in nitric acid and then the uranium was thoroughly dried and placed in the fluorinator. After evacuating the equipment, the temperature was raised to 300-350°C and 20 ml/min of fluorine was fed to the reactor. A sharp rise in temperature gave evidence that the reaction had started. The external heat was then removed, and the fluorine flowrate was increased to about 250 ml/min. The temperature rose to about 400°C and gradually dropped to 300°C. When fluorination was nearly complete, a rise in temperature of 150-200°C in a few seconds indicated that only a small amount of unreacted metal remained. After the reaction subsided, external heat was applied to raise the temperature to 500°C for 30 minutes before stopping the fluorine flow. This procedure removed the last traces of metal and lower fluorides.

Fluorination Equipment and Procedure (continued)

The UF_6 produced was passed through adsorbers and/or filters to effect decontamination and finally condensed in traps cooled in dry ice and trichlorethylene (Figure 1). Gases passing through the cold trap were sent to a soda lime trap and vented to the hood exhaust.

After fluorination was complete, the equipment was evacuated and swept free of fluorine by means of nitrogen. The fluorinator was dissolved in nitric acid, and an aliquot of this solution was used for analyses.

4.2 Fluorination Results

The results obtained for the fluorination of uranium metal irradiated 335 days and cooled 30 months are presented in Table 1. From 4 to 20% of the plutonium remained in the reactor, while only 0.0006 - 0.08% of the uranium remained behind. Gross β, Gross γ, Ru β, TREβ, Csβ, and Srβ decontamination factors were all within the range of 2 - 13.

The higher uranium losses in experiments 1 and 14 were a result of incomplete fluorination due to too short a heating period in a fluorine atmosphere after the reaction had subsided. The high values for the fission product decontamination factors and plutonium hold up in Experiments 1, 2, and 3 resulted from increased reactor size and the uneven temperatures in the reactors. Since the only fission products present form non-volatile or only slightly volatile fluorides, the main reason for the low and inconsistant decontamination factors was solid entrainment in the gaseous UF_6.

Fluorination Results (continued)

In experiments 7, 14, 16, and 17, the reaction was started by first filling the equipment with nitrogen instead of evacuating it. As a result, the plutonium remaining in the reactor was 30-40% instead of 4 - 20%. The reason for this difference is not understood; however, a test (Exp. 18) was made to determine plutonium hold up when the equipment was first evacuated and the uranium then fluorinated with a mixture of 55% nitrogen and 45% fluorine. The plutonium remaining in the reactor in this case was only 10%. As yet no method is known for keeping all the plutonium in the reactor nor for removing it all by volatilization when fluorine gas is the fluorinating agent.

The direct fluorination was carried out at a rate of about 20 grams of uranium converted per hour. This rate was controlled quite easily by regulating the fluorine flowrate. There was little or no reaction noted between uranium metal and fluorine at temperatures below 300°C, and additional heat was needed at the end of the reaction to fluorinate the last traces of uranium metal and intermediate fluorides to UF_6.

5.0 Adsorption of Fission Products and Plutonium

Since PuF_6 has almost the same vapor pressure as UF_6[4], its separation from uranium by fractional distillation would be difficult and some other method, such as adsorption, for effecting the separation would prove to be

Adsorption of Fission Products and Plutonium (continued)

of considerable value. Previous work showed that plutonium hexafluoride is less stable than UF_6 since the plutonium plated out on copper connecting lines in the experimental apparatus(5). Adsorption on copper and Alundum were tested and copper was found to be partially effective and Alundum completely satisfactory for removing plutonium from UF_6. Neither the copper nor the Alundum removed enough of the Gross β activity from the UF_6 to be of value for a decontamination procedure.

Graphite and activated calcium sulfate were found to react with UF_6 at 100°C and so were not tested further. Sodium fluoride and UF_6 form an intermolecular compound which decomposes to give fluorine when heated. Since UF_6 cannot be removed from this compound by sublimation, sodium fluoride was not considered as an adsorbing medium to remove the plutonium.

5.1 Adsorption on Copper

Three types of copper traps were used to adsorb plutonium: (1) a coil of 1/4 inch tubing 3 feet long, (2) a "U" tube 9 inches high made from 1-1/8 inch diameter tubing and packed with copper turnings, (3) cylinders 2 inches in diameter and from 3 to 15 inches long (Figure 3). The stream of gaseous uranium hexafluoride from the reactor was passed through these vessels which were heated to 70-80°C in a water bath. After the experiments were completed, the traps were washed with dilute nitric acid to removed the plutonium, uranium, and fission products.

Adsorption on Copper (continued)

The three feet of copper tubing removed 27% of the plutonium while the trap packed with copper turnings removed 70% of the plutonium.

In the experiments using the 2 inch diameter copper traps, the amount of plutonium held up was proportional to the length of the traps (Table 2). This increase of adsorption may be due to the increase of surface area, increase of contact time, or both. The plutonium hold up for the 3-1/4 inch trap was 21%, for the 7-1/2 inch trap was 57%, for the 9 inch trap was 98.7%, and for the 15 inch trap was 92.2%. The high value for the 9 inch trap is not explained. The results indicate that the last trace of plutonium may be difficult to remove by means of adsorption on copper.

The fission product decontamination factor over these traps was negligible (about 1.1). The uranium hold up was small ($\leq 0.3\%$) except when the copper adsorption was preceded by condensation and resublimation as in Experiment 12. This high loss of 8% may either be due to reduction of UF_6 during the first condensation or to an inadequate sweep out of the equipment after resublimation.

5.2 Adsorption on Alundum

Chips from Alundum crucibles were placed in a nickel tube 1 inch in diameter and 9 inches long (Figure 4). The bed was heated to 100°C in a tube furnace, and the gaseous UF_6 stream from the fluorinator was passed through the Alundum. For analytical purposes the plutonium, uranium, and fission products were removed from the Alundum by elution with 30% nitric acid.

Adsorption on Alundum (continued)

The Alundum bed removed 92-99% of the plutonium (Table 3). The plutonium passing through was thought to be non-volatile since it could be easily removed by filtration (Experiment 22, Table 4) or by resublimation of the UF_6 (Experiments 20 to 21, Table 5). The uranium loss on the Alundum was 1-3%, and the fission product decontamination factors were only about 1.4.

6.0 Filtration of Uranium Hexafluoride

During early experiments a considerable quantity of fission products was carried over from the fluorinator to the cold trap. This suggested that solid particles were entrained in the gas since all the fission products present formed non-volatile or only slightly volatile fluorides. Barrier backing tubes were used as a laboratory tool in determining whether or not the activity and plutonium carry-over was due to entrainment.

6.1 Filtration Equipment and Procedure

A nickel, barrier backing filter tube 1/2 inch in diameter and 5 inches long was fitted with nickel ferrules. One end of the tube was closed and the other end was flanged. This assembly was sealed into a nickel tube (1"D x 8") by the use of heavy flanges and a double gasket arrangement (Figure 5). A thermocouple well extended through the end plate flange to the center of the barrier backing tube. The inlet and outlet for the filter consisted of 1/4 inch brass tube fittings silver soldered into the ends of the case.

Filtration Equipment and Procedure (continued)

Uranium hexafluoride was passed through the barrier backing at 70 - 225°C. After filtration was complete, the barrier backing and ferrules were dissolved in concentrated nitric acid, and the case was washed with dilute nitric acid. These solutions were analyzed for gross β, plutonium, and uranium.

6.2 Filtration Results and Discussion

When the uranium hexafluoride came directly from the fluorinator, the plutonium hold up on the filter was 30 - 75% and was not a function of temperature in the range of 70°C to 230°C (Table 4). Only 0.01 - 0.15% of the uranium remained on the filter. The high value of 3.7% in Experiment 14 may have been caused by incomplete nitrogen sweeps of the equipment after the reaction was completed. The gross β decontamination factor was 10^3 when the filter was operated at 70°C and 300 when the temperature was 220 - 240°C. The only individual fission product decontamination factor that was substantially affected by temperature was that for ruthenium. At 70°C, the Ruβ decontamination factor was 200-500, and at 225°C it was only 15. In general, the decontamination factors for Csβ, Srβ, and TREβ were slightly greater than 10^3.

When filtration was preceded by resublimation, the filtration showed little improvement in decontamination since the activity was too low for accurate analysis (Exp. 19).

Filtration Results and Discussion (continued)

When the filter was used after an Alundum adsorber (Experiment 22), <1 Pu α ct/m/mg U passed through the filter and <0.01% of the uranium stayed on the filter. The fission product decontamination factors were of the same order as for filtration of uranium hexafluoride coming directly from the fluorinator.

Since no way is known to removed plutonium, uranium, and fission products from the barrier backing except by washing, it is recommended that filtration of this type be used only as a laboratory tool and not be considered for large scale operation. After washing barrier backing, it is very difficult to dry it thoroughly enough to pass UF_6 and F_2 through it again.

7.0 Resublimation of Uranium Hexafluoride

Simple batch sublimations were made to determine their effectiveness in further decontaminating UF_6 from fission products and plutonium.

7.1 Sublimation Equipment and Procedure

Uranium hexafluoride was condensed in copper traps of various sizes, the trap most used being a cylinder 3 inches in diameter and 12 inches high. To carry out a resublimation, the trap containing uranium hexafluoride was placed in a water bath and heated to 90°C. The uranium hexafluoride was volatilized and passed through a copper connecting line to a similar trap placed in a bath of dry ice-trichloroethylene. A reasonable length of time was allowed for the sublimation to take place, since there was no convenient method of determining when it was complete. No nitrogen or fluorine sweeps

were made to remove the last traces of UF_6.

7.2 Resublimation Results and Discussion

The results for batch resublimation varied considerably for two reasons: (1) the resublimation was crude and often incomplete, and (2) the previous treatment of the uranium hexafluoride varied widely.

The only fission products present form non-volatile fluorides which must have been carried into the cold trap by entrainment. The resublimation should serve primarily to remove the uranium hexafluoride gas from these solids. Since the distillations were crude, the amount of solid entrainment varied and gave a wide range of decontamination factors. Gross β decontamination factors were 12-330 (Table 5). For resublimation preceded by filtration, the amount of activity present was so small that the gross β decontamination factors could not be determined.

Plutonium decontamination factors over the resublimation step were probably dependent upon both the entrainment phenomenon and the adsorption of the volatile plutonium on the copper walls. Resublimation removed 80-100% of the plutonium.

Uranium losses varied widely due to incomplete sublimation and sweep out of the equipment.

8.0 Overall Results

Fluorination, copper adsorption, Alundum adsorption, filtration, and resublimation procedures were combined in various ways to study the separation

Overall Results (continued)

of plutonium and fission products from uranium metal irradiated 335 days in the ORNL pile and cooled 30 months. The overall procedure and results for various experiments are given in Table 6. Purities of the uranium hexafluoride products are given in Table 7.

The most effective removal of fission products was made in the experiments involving a filtration step. The overall gross β decontamination factors varied from 3×10^3 to greater than 10^4 and the products contained 1 - 50 β cts/m/mg U. Experiments containing a resublimation but no filtration were less effective in removing fission products. Gross β decontamination factors were 230 to 1.4×10^3 with a corresponding higher activity in the product. The one experiment (No. 1) which used only fluorination and copper adsorption gave a gross β decontamination factor of only 12.

The most effective and only satisfactory removal of plutonium was made in experiments using Alundum adsorption. In these experiments (Nos. 20, 21, 22) the plutonium decontamination factors were 6×10^3 to 6×10^4 and the uranium product contained <0.5 plutonium ct/m/mg U. In all the other experiments, plutonium decontamination varied widely; however, large copper adsorbing surfaces tended to increase the decontamination factors.

Uranium losses for all the experiments were quite high. These losses were explained under the various sections in this report dealing with the individual operations. It may not be possible to reduce the uranium loss of 1 - 3% on the Alundum adsorber; however, by improved operating techniques the other losses can be reduced to $<0.1\%$.

9.0 Recommendations

The results of the experiments presented in this report serve primarily as a guide to further investigations. There are many problems remaining to be solved and the following recommendations deal only with those which should be studied in the immediate future.

9.1 Preparation of Uranium Hexafluoride

A thorough investigation of various methods of converting uranium metal to UF_6 is needed. From this study should come the optimum procedure from the view point of safety, ease of operation, and economics.

9.2 Adsorption Techniques

A more complete survey of adsorbing media for removing plutonium and of elution methods is needed. Design information should be obtained for the most promising adsorbers.

9.3 Distillation Studies

A program to determine the relative volatilities of various fission product fluorides is now in progress. Determination of the optimum distillation methods, and testing on a laboratory scale should be carried out.

9.4 Phase Diagram

Solubilities of the fission product fluorides in uranium hexafluoride should be obtained. Phase diagrams involving BrF_3, ClF_3, and HF will also be needed if these materials are to be used in the fluoride process.

9.5 Filtration

At present, filtration seems to be valuable only as a laboratory tool. Filtration in large scale operations is not desirable due to difficulties of washing the filter free of plutonium and fission products and then drying so it can be reused. At this time no further work need be done on this procedure.

9.6 Equipment Development

Special equipment and samplers are needed to study all of the previously mentioned problems. Development and testing of this equipment can best be carried out along with the investigations for which the equipment is needed.

10.0 Bibliography

1. Anderson, H. L., and Brown, H. S., Report CN-362, Liquid UF_6 Plant for the Production of Element 94, November 27, 1942.

2. Barry, L. A., Montillon, G. H., and Van Winkle, R., Report K-548, Fluorination of Uranium Pile Slugs with Elemental Fluorine, Carbide and Carbon Chemicals Corporation, K-25, December 30, 1949.

3. Bernhardt, H. A., Gustison, R. A., Kirslis, S. S., and Wendolkowski, W. S., Report K-345, Hydrofluorination of Massive Uranium Metal to Uranium Tetrafluoride, K-25 Laboratory Division, February 1, 1949.

4. Florin, A., Dry Fluoride Meeting at Argonne National Laboratory, September 8, 1950.

5. Seaborg, G. T., Williard, J. E., et al, Report CN-696, Chemical Research-Production and Extraction of Plutonium, Metallurgical Laboratory, Report for May 16-31, 1943.

6. Webster, D. S., Report CN-1206 (A-1686), Engineering Studies of Dry Fluoride Process, Clinton Laboratories, January 10, 1944.

Table I

Removal of Plutonium and Fission Products from Uranium by Fluorination

Conditions:
(1) Reactor: 1-1/2" OD nickel tube 2 inches deep
(2) Uranium metal irradiated 335 days in the ORNL pile and cooled 30 months.
(3) Reaction temperature: 250-600°C
(4) Reaction pressure: most experiments started under vacuum and gradually increased to one atmosphere
(5) Fluorine flowrate: started at 20 ml/min and increased to >200 ml/min.

Experiment Number	Uranium Feed (grams)	% Hold up in Fluorinator		Decontamination Factors						
		Uranium	Plutonium	Pu α	Gross γ	Gross β	Ru β	Cs β	Sr β	TRE β
1[a]	35.0	1.69[h]	27	1.5	10	10	7	11	6	10
2[b]	44.1	0.300	46	2.0	16	27	23	21	29	27
3[b]	64.1	0.080	41	2.4	15	20	15	13	18	25
4[c]	16.0	<0.002	12	1.5		7				
5[d]	36.1	<0.002	19	2.2		4				
6	27.0	<0.060	17	1.2		6				
7[e]	57.5	0.050	33	1.4	7	5	4	5	4	5
8	45.8	0.005	8	1.2	5	5	6	3	4	6
9	50.8	<0.005	5.1	1.2	3	3	4	3	2	3
10	48.0	0.080	8.	1.4	5	7	10	5	4	7
11	41.0	<0.006	5.4	1.4	7	7	13	6	5	7
12	72.2	<0.004	7	1.1	4	5	4	3	4	6
13	75.5	0.015	14	1.6	3	3	6	3	2	3
14[e]	75.8	1.81[h]	40	1.9	3	4	7	3	4	5
15	76.0	0.020	19	1.4	4	4	10	3	3	4
16[e]	245.0	0.0006	31	1.5	3	4	6	3	3	4
17[f]	50.0	0.070	31	1.9		4				
18[g]	37.8	0.034	10	1.2		3				
19	73.3	<0.004	4.0	1.1	5	7	11	4	5	14

(continued)

Table I (continued)

Experiment Number	Uranium Feed (grams)	% Hold up in Fluorinator		Decontamination Factors						
		Uranium	Plutonium	Pu α	Gross γ	Gross β	Ru β	Cs β	Sr β	TRE β
20	24.7	0.009	10.	1.2		4				
21	39.9	<0.002	10.	1.3		5				
22	48.2	<0.002	15	1.4		5				

a A larger reactor was used 2"D x 6". Temperature not uniform throughout reactor.
b A larger reactor was used 2"D x 12". Temperature not uniform throughtout reactor.
c Fluorination carried out at 20-26" vacuum.
d Fluorination carried out at 4 - 7 psig.
e Fluorination started with atmosphere of nitrogen in fluorinator.
f Started under nitrogen atmosphere. 30% N_2 - 70% F_2 fluorinating gas.
g Started under vacuum. 55% N_2 - 45% F_2 fluorinating gas.
h Insufficient heating period after reaction subsided.

Table 2

Removal of Plutonium and Fission Products from Gaseous UF_6 by Adsorption on Copper

Conditions:

(1) Equipment as noted
(2) Uranium irradiated 335 days and cooled 30 months
(3) Temperature of trap 70-80°C
(4) Previous process steps as noted

Experiment Number	Previous Process Steps	Copper Trap Description	% of Original Charge Held up in Copper		% of Pu to trap held-up in trap	Decontamination Factors						
			U	Pu		Pu α	Gross γ	Gross β	Ru β	Cs β	Sr β	TRE β
1	Fluorination	3' of 1/4" tubing	0.24	19	27	1.4	1.2	1.2	2	1.1	1.1	1.1
7	Fluorination	1-1/8"D x 9" U tube packed with Cu turnings	0.30	53	70	4	>5	4	1.5	4	5	4
8	Fluorination	2"D x 3-1/4"	<0.01	18	21	1.3	1.03	1.03	1.03	1.03	1.04	1.04
9	Fluorination	2"D x 7-1/2"	<0.01	49	57	2	1.2	1.2	1.7	1.2	1.1	1.2
10	Fluorination	2"D x 9"	-	71	99	74	1.2	1.2	1.3	1.2	1.2	1.2
11	Fluorination	2"D x 15"	<0.01	66	92	13	1.1	1.07	1.2	1.07	1.07	1.07
12	Fluorination Resublimation	2"D x 15"	8.1	0.07	19	1.1	>1	1.2	1.00	1.7	2	1.7

Table 3

Removal of Plutonium and Fission Products from Gaseous UF_6 by Adsorption on Alundum

Conditions:

(1) Ca 100 grams of chipped Alundum in a nickel case 1"D x 9"
(2) UF_6 prepared by direct reaction of fluorine and uranium irradiated 335 days and cooled 30 months
(3) Temperature of Alundum bed: 95 - 115°C

Experiment Number	% of Original Charge held up in Alundum		% of Pu entering Alundum which was held up in the Alundum	Decontamination Factors	
	Uranium	Plutonium		Pu α	Gross β
20	3.3	75	92	13	1.3
21	1.3	81	99	96	1.4
22	2.4	70	98	58	1.3

Table 4

Removal of Plutonium and Fission Products from Gaseous UF_6 by Filtration

Conditions:

(1) Filter - nickel barrier backing tube 5/8"OD x 5" in a nickel case 1"D x 10"
(2) Uranium irradiated 335 days and cooled 30 months
(3) Temperature of filter as noted
(4) Previous process steps as noted

Experiment Number	Previous Process Steps	Filter Temp. °C	% of Original Charge Held up on Filter		% of Pu to the Filter held up on Filter	Decontamination Factors						
			U	Pu		Pu α	Gross γ	Gross β	Ru β	Csβ	Sr β	TRE β
13	Fluorination	220-240	0.01	19	29	1.4	190	310	13	430	1200	930
14		185-205	3.69	27	53	2.1	>90	410	17	>2800	1800	1400
15		70-90	0.001	27	38	1.6	>40	1100	220	2200	2600	1800
16		65-85	0.009	20	30	1.4	>80	870	490	8300	3800	1200
17		87-105	0.022	32	61	3		1400				
18		85-110	0.070	57	75	4		920				
19	Fluorination Resublimation	75-85	0.120	0.85	65	3	>20	>8	>2	>14	>80	>100
22	Fluorination Alundum Adsorption	102-110	<0.01	1.15	97	30		810				

Table 5

Removal of Plutonium and Fission Products from UF_6 by Batch Sublimation

Conditions: (1) Copper and stainless steel cold traps of various sizes were used.
(2) The trap containing UF_6 was placed in a water bath at 90°C
(3) Previous treatment as noted.
(4) Uranium was irradiated335 days in the ORNL pile and cooled 30 months

Experiment Number	Previous Process Steps	% of Original Charge Held up in Still Pot		Decontamination Factors						
		U	Pu	Pu α	Gross γ	Gross β	Ru β	Cs β	Sr β	TRE β
2	Fluorination	0.9	48	19	> 6	46	5	190	70	140
3		1.6	42	100	>25	20	8	27	20	21
4		1.1	68	95		33				
5		4.9	43	>2000		330				
6		10.8	84	290		320				
6	Fluorination Resublimations (2)	11.5	0.06	~1.3		> 4				
7	Fluorination	0.30	5.5	1.4	> 2	12	> 3	140	110	60
8	Copper Adsorption	5.9	52	5	>32	250	60	310	340	280
9		2.3	35	21	>34	100	5	260	600	310
10		0.08	0.58	5	>55	120	37	140	150	140
11		2.5	4.5	5	>13	80	18	80	70	100
12	Fluorination Resublimation Copper Adsorption	16.2	77	180	~50	70	8	240	260	210
13	Fluorination	0.16	43	19	>100	8	18	> 10	>10	> 24
14	Filtration	2.1	24	30	> 2	> 6	~20	~ 6	~30	~ 39
15		0.15	44	90	>2	> 2	> 2	> 3	>1.3	> 1.4
16		1.4	39	6	>1.1	> 1.2	> 1.7	> 1.5	>1.4	> 1.2
19	Fluorination	14.2	86	66	31	100	32	220	110	50
20	Fluorination, Alundum	17.8	6.2	>4000		210				
21	Adsorption	23.8	0.84	> 50		100				
22	Fluorination, Alundum Adsorption, Filtration	2.9	0.04	>30		> 2				

Table 6

Overall Results for Dry Processing

Conditions: (1) Uranium irradiated 335 days in the ORNL pile and cooled 30 months
(2) Procedure as listed

Experiment Number	Process Steps[a]	Uranium Loss %	% of Pu in Product UF_6	Decontamination Factors						
				Pu α	Gross γ	Gross β x10^{-3}	Ru β x10^{-3}	Cs β x10^{-3}	Sr β x10^{-3}	TRE β x10^{-3}
1	Fluorination Copper Adsorption	1.93	50	2	11	0.012	0.013	0.013	0.007	0.011
2	Fluorination Resublimation	1.20	2.74	36	>110	1.3	0.11	4.3	2.0	4.0
3		1.60	0.41	240	>380	.41	0.12	0.37	0.37	0.54
4		1.10	0.73	140		.23				
5		4.90	<0.02	4600		1.4				
6	Fluorination Resublimations (2)	22.3	0.023	430		7.0				
7	Fluorination Copper Adsorption Resublimation	0.45	14.5	7	>160	.24	0.015	3.0	2.2	1.3
8		5.86	13.7	7	>150	1.3	0.35	0.90	1.4	1.7
9		2.31	1.79	60	>130	.34	0.037	0.70	1.6	1.1
10		0.93	0.014	700	>370	1.0	0.50	1.0	0.79	1.2
11		2.52	1.13	90	> 90	.50	0.28	0.48	0.40	0.70
12	Fluorination Resublimation Copper Adsorption	24.3	0.290	210	>220	.47	0.037	1.2	>2.0	2.0
13	Fluorination Filtration Resublimation	0.19	2.50	41	>1000	7.0	1.2	>15.	20.	>60.
14		7.60	0.83	120	> 420	11.0	2.6	>50.	>200.	>300.
15		0.17	0.49	200	>330	8.0	4.6	>24.	> 9.0	>10.
16		1.43	7.66	13	>260	3.9	4.8	>34	>10.	> 6.
17		0.09	20.1	5		6.0				
18		0.10	18.7	5		3.0				

(continued)

Table 6 (continued)

Experiment Number	Process Steps[a]	Uranium Loss %	% of Pu in Product UF_6	Decontamination Factors						
				Pu α	Gross γ	Gross β x10^{-3}	Ru β x10^{-3}	Cs β x10^{-3}	Sr β x10^{-3}	TRE β x10^{-3}
19	Fluorination Resublimation, Filtration	14.3	0.46	220	> 2,900	5.5	0.70	11.	> 50.	> 80.
20 21	Fluorination Alundum Adsorption Resublimation	21.1 25.1	< 0.001 < 0.01	> 60,000 > 6,000		1.0 .60				
22	Fluorination Alundum Adsorption Filtration, Resublimation	5.3	< 0.001	> 70,000		> 10.0				

(a) For more detailed procedure, see tables describing each operation.

Table 7

Purity of UF_6 After Dry Processing

Conditions:
(1) Uranium irradiated 335 days in the ORNL pile and cooled 30 months
(2) Procedure as listed

Experiment Number	Process Steps[a]	cts/m/mg U in Product						
		Pu α	Gross γ	Gross β	Ru β	Cs β	Sr β	TRE β
1	Fluorination Copper Adsorption	1.1×10^3	9	1.1×10^4	410	2.2×10^3	2.7×10^3	7×10^3
2	Fluorination Resublimation	60	< 0.9	100	50	6	9	19
3		9	< 0.3	300	44	70	47	140
4		15		600				
5		< 0.6		90				
6	Fluorination 2 Resublimations	6		25				
7	Fluorination Copper Adsorption Resublimation	330	< 0.7	500	510	6	7	80
8		300	< 0.8	120	25	21	11	70
9		44	< 1	500	270	30	12	120
10		< 3	< 0.3	130	11	27	21	60
11		25	< 1	290	31	40	39	140
12	Fluorination Resublimation Copper Adsorption	10	< 0.5	300	220	15	7	48
13	Fluorination Filtration Resublimation	60	< 0.2	~ 12	< 5	< 2	< 0.9	< 1
14		17	< 0.2	< 1	< 2	< 0.5	< 0.1	< 0.3
15		10	< 0.3	< 9	< 1	< 1	< 2	~ 6
16		160	< 0.4	15	< 1	< 0.7	1	12
17		600		26				
18		600		48				

(continued)

Table 7 (continued)

Experiment Number	Process Steps[a]	cts/m/mg U in Product						
		Pu α	Gross γ	Gross β	Ru β	Cs β	Sr β	[illegible] β
19	Fluorination Resublimation Filtration	11	< 0.1	31	14	< 0.4	1.9	1.5
20 21	Fluorination Alundum Adsorption Resublimation	< 0.05 < 0.5		150 240				
22	Fluorination Alundum Adsorption Filtration Resublimation	< 0.03		~ 14				

(a) For more detailed procedure, see tables describing each operation.

FIGURE 1

SCHEMATIC DIAGRAM FOR DRY FLUORIDE EXPERIMENTS

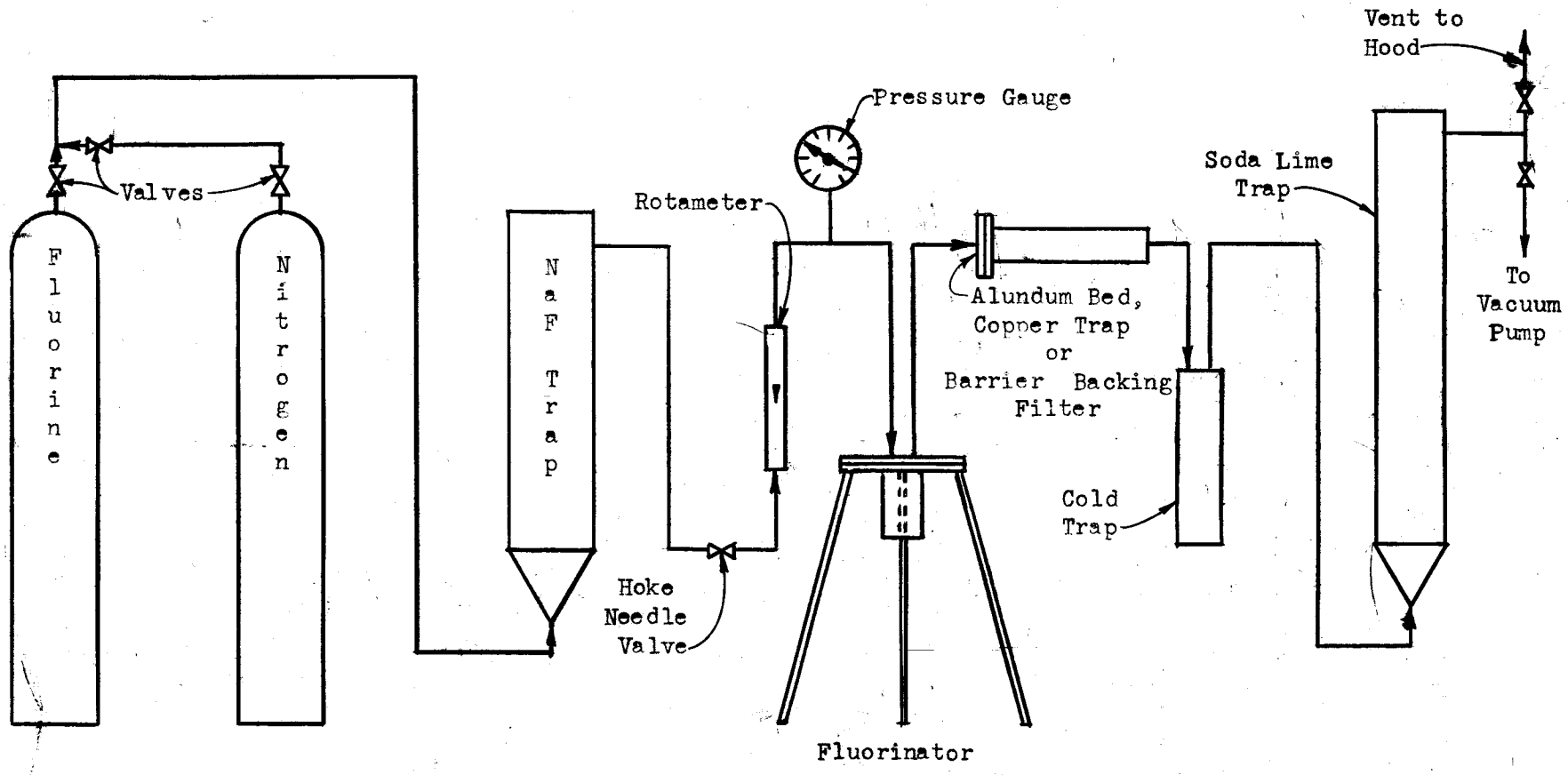

2-7-51
RBW

[redacted]

FIGURE 2

FLUORINATOR ASSEMBLY

ORNL-980
Dwg.# 10640

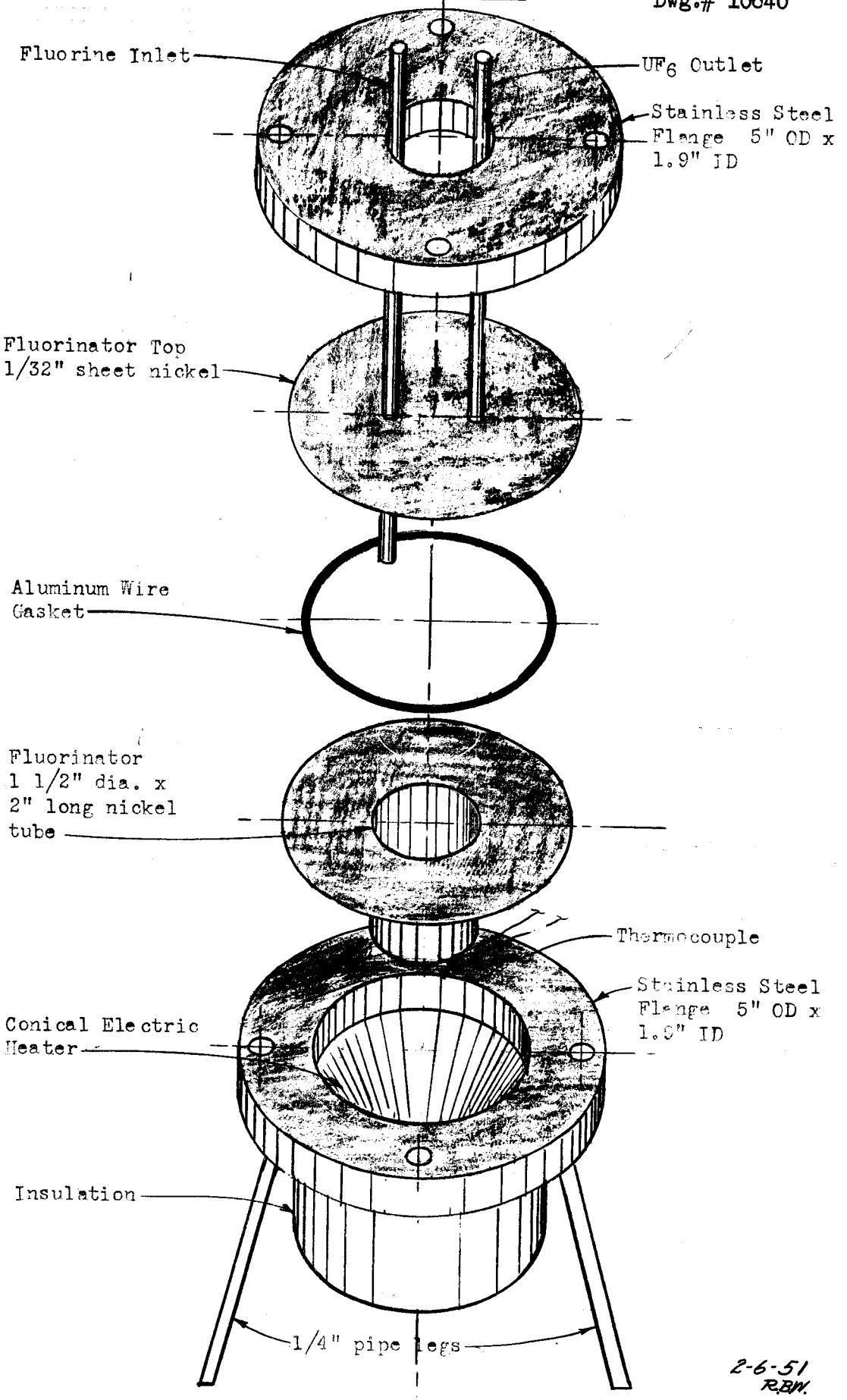

2-6-51
R.B.W.

[redacted]

[redacted]

ORNL-980
Dwg. #10641

FIGURE 3
COPPER ABSORPTION TRAP

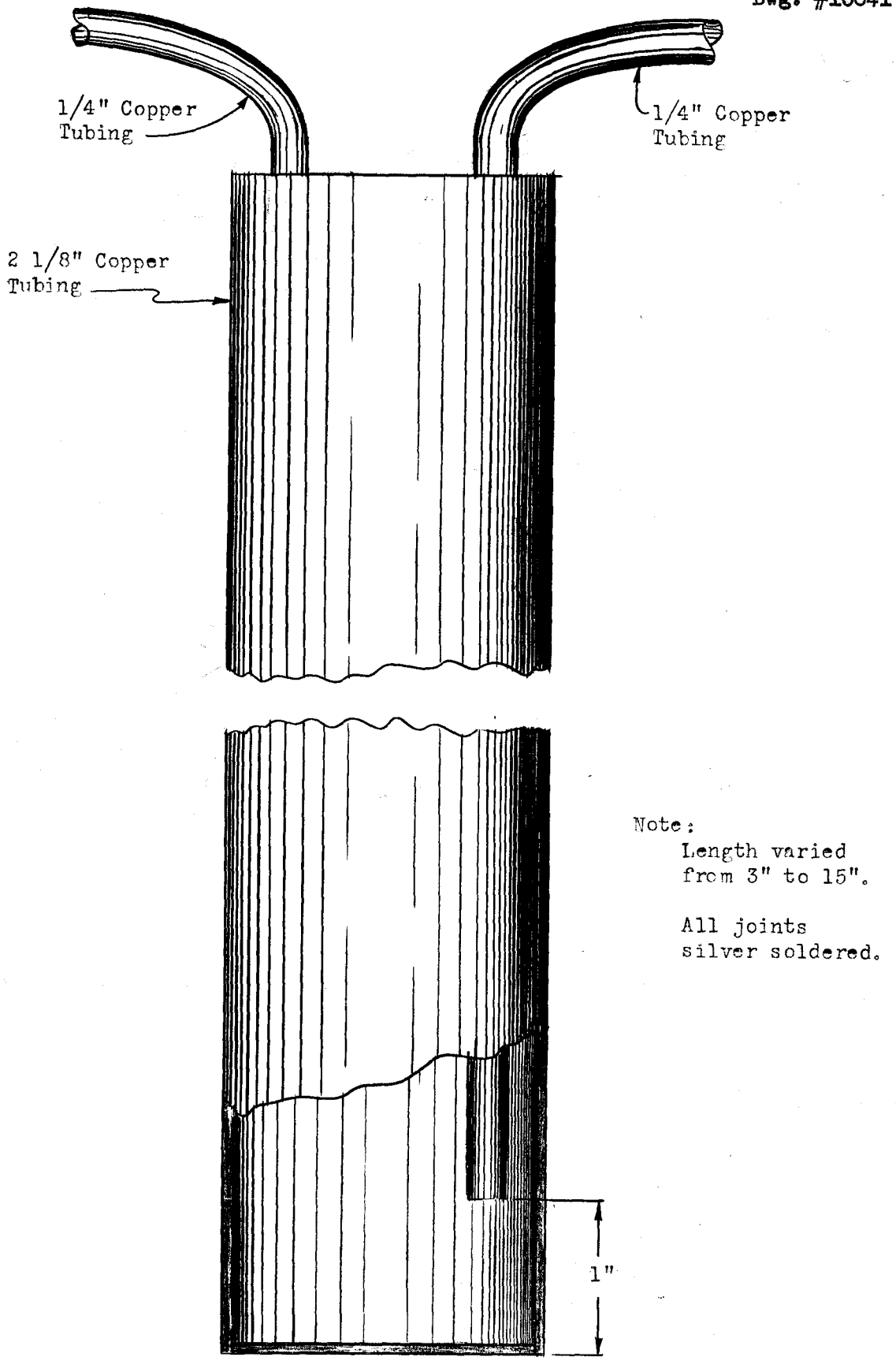

Note:
Length varied from 3" to 15".

All joints silver soldered.

2-8-51
RBW

[redacted]

ORNL-980
Dwg. # 10642

FIGURE 4
ALUNDUM ADSORPTION BED

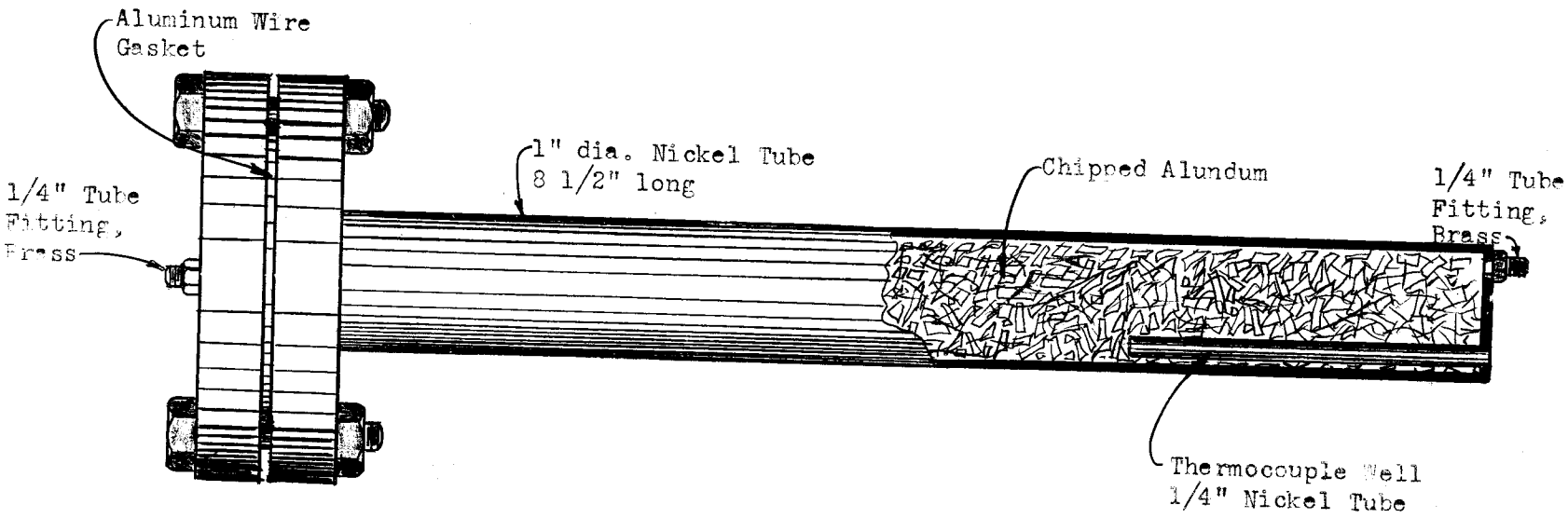

Note:

All material Nickel except where noted.
All joints silver soldered.

2-8-51
RBW

[redacted]

ORNL-980
Dwg.# 10643

FIGURE 5

FILTRATION ASSEMBLY

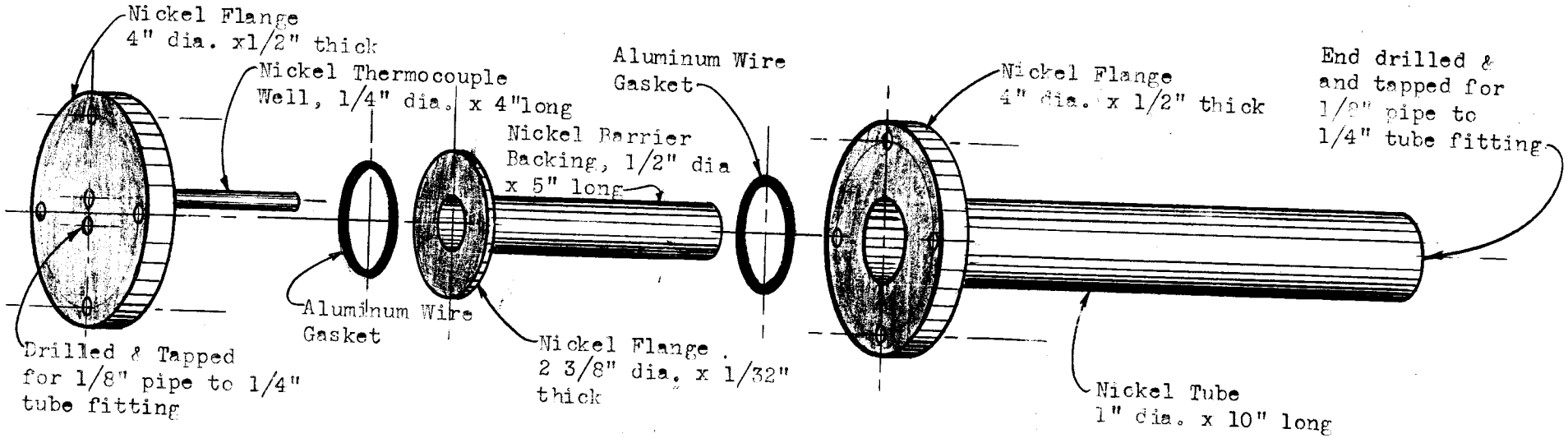

[redacted]

2-6-51
R.B.W.