UNCLASSIFIED

MARTIN MARIETTA ENERGY SYSTEMS LIBRARIES

3 4456 0049262 4

ORNL 1056
Progress Report

# INSTRUMENT RESEARCH AND DEVELOPMENT

# QUARTERLY PROGRESS REPORT

for Peroid Ending April 20, 1951

OAK RIDGE NATIONAL LABORATORY
OPERATED BY
CARBIDE AND CARBON CHEMICALS COMPANY
A DIVISION OF UNION CARBIDE AND CARBON CORPORATION
UCC
POST OFFICE BOX P
OAK RIDGE, TENNESSEE

UNCLASSIFIED

UNCLASSIFIED

ORNL-1056
Progress Report

This document consists of 29 pages.
Copy 7 of 208 . Series A

Contract No. W-7405 eng 26

# INSTRUMENT RESEARCH AND DEVELOPMENT QUARTERLY PROGRESS REPORT for Period Ending April 20, 1951

Compiled by
W. E. Thompson

Date Issued:

OAK RIDGE NATIONAL LABORATORY
operated by
CARBIDE AND CARBON CHEMICALS COMPANY
A Division of Union Carbide and Carbon Corporation
Post Office Box P
Oak Ridge, Tennessee

UNCLASSIFIED

MARTIN MARIETTA ENERGY SYSTEMS LIBRARIES
3 4456 0049262 4

ORNL-1056
Progress Report

*INTERNAL*

1. G. T. Felbeck (C&CCC)
2-3. Chemistry Library
4. Physics Library
5. Biology Library
6. Health Physics Library
7. Metallurgy Library
8-9. Training School Library
10-13. Central Files
14. C. E. Center
15. C. E. Larson
16. S. Cromer (K-25)
17. W. D. Lavers (Y-12)
18. A. M. Weinberg
19. E. H. Taylor
20. E. J. Murphy
21. E. D. Shipley
22. C. S. Harrill
23. F. C. VonderLage
24. R. C. Briant
25. J. A. Swartout
26. S. C. Lind
27. F. L. Steahly
28. A. H. Snell
29. A. Hollaender
30. M. T. Kelley
31. K. Z. Morgan
32. J. S. Felton
33. A. S. Householder
34. C. E. Winters
35. D. W. Cardwell
36. W. H. Pennington
37. L. M. Reynolds
38. W. J. Ladniak
39. P. R. Bell
40. C. J. Borkowski
41. W. M. Hurst
42. W. H. Jordan
43. R. S. Livingston
44. E. E. Fairstein
45. J. W. Morfitt
46. C. W. Sheppard
47. W. G. Stone
48. F. Western
49. C. P. Keim
50. C. D. Susano
51. M. J. Skinner
52. Central Files (OP)

*EXTERNAL*

53-60. Argonne National Laboratory
61. Armed Forces Special Weapons Project
62-64. Atomic Energy Commission, Washington
65. Battelle Memorial Institute
66. Brush Beryllium Company
67-70. Brookhaven National Laboratory
71. Bureau of Medicine and Surgery
72. Bureau of Ships
73-76. Carbide and Carbon Chemicals Division (K-25 Plant)
77. Columbia University (J. R. Dunning)
78. Columbia University (G. Failla)
79. Dow Chemical Company
80-84. E. I. duPont deNemours and Company
85-90. General Electric, Richland
91-94. Idaho Operations Office
95-96. Iowa State College
97. Kansas City Operations Branch
98. Kellex Corporation
99. Kirtland Air Force Base
100-103. Knolls Atomic Power Laboratory
104-106. Los Alamos Scientific Laboratory
107. Mallinckrodt Chemical Works
108. Massachusetts Institute of Technology (A. Gaudin)
109. Massachusetts Institute of Technology (A. R. Kaufmann)
110. Massachusetts Institute of Technology, Department of Electrical Engineering

*EXTERNAL (Cont'd)*

111-113. Mound Laboratory
114. National Advisory Committee for Aeronautics
115. National Bureau of Standards (R. D. Huntoon)
116. Naval Medical Research Institute
117-118. Naval Radiological Defense Laboratory
119. New Brunswick Laboratory
120-122. New York Operations Office
123-124. North American Aviation, Inc.
125-128. Carbide and Carbon Chemicals Division (Y-12 Area)
129. Patent Branch, Washington
130. RAND Corporation
131. Sandia Corporation
132. Santa Fe Operations Office
133. Savannah River Operations Office, Wilmington
134-148. Technical Information Service, Oak Ridge
149-150. U. S. Geological Survey (T. B. Nolan)
151-152. U. S. Public Health Service
153. University of California at Los Angeles
154-156. University of California Radiation Laboratory
157-158. University of Rochester
159. University of Washington
160. Western Reserve University
161-164. Westinghouse Electric Corporation
165-168. Atomic Energy Project, Chalk River
169. Chief of Naval Research
170. H. K. Ferguson Company
171. Harshaw Chemical Corporation
172. Isotopes Division (Mr. McCormick)
173-174. Library of Congress, Acquisition Department (J. W. Cormn)
175. National Bureau of Standards (Library
176. National Research Council, Ottawa
177. Naval Research Laboratory
178. Nevis Cyclotron Laboratories
179-180. Oak Ridge Institute of Nuclear Studies
181-190. United Kingdom Scientific Mission (M. Greenhill)
191. USAF, Air Surgeon (Col. A. P. Gagge)
192. USAF, Eglin Air Force Base (Technical Library)
193. USAF, Wright-Patterson Air Force Base (Rodney Nudenberg)
194-198. USAF, Wright-Patterson Air Force Base (CADO)
199. U. S. Army, Army Field Forces (Captain James Kerr)
200. U. S. Army, Army Medical Service Graduate School (Col. W. S. Stone)
201. U. S. Army, Atomic Energy Branch (Lt. Col. A. W. Betts)
202. U. S. Army, Director of Operations Research (Dr. Ellis Johnson)
203-204. U. S. Army, Office of the Chief Signal Officer (Curtis T. Clayton thru Major George C. Hunt)
205-207. U. S. Army, Technical Command (Col. J. H. Rothschild Attn: Technical Library)
208. UT-AEC Agricultural Research Program (Charles S. Hobbs)

Instrument Research and Development quarterly progress reports previously issued in this series are as follows:

| | |
|---|---|
| ORNL-714 | Period Ending April 15, 1950 |
| ORNL-796 | Period Ending July 15, 1950 |
| ORNL-924 | Period Ending October 31, 1950 |
| ORNL-1021 | Period Ending January 20, 1951 |

# TABLE OF CONTENTS


1. CHEMISTRY DIVISION 1

4π Proportional Beta Counter for Absolute Disintegration-Rate Measurements 1

Precision Pulser Circuit 10

2. HEALTH PHYSICS DIVISION 12

Constant Water Monitor 12

3. INSTRUMENT DEPARTMENT 13

Van de Graaff Electrodes for Tapered Proton Tube 13

Van de Graaff Low-Impedance Baffle 13

Cockcroft-Walton Power Supply 13

Radiofrequency Ion Source 14

Electrostatic-Lens Development 14

Continuous Proportional Sampling for Liquid-Waste Disposal 14

Remote Recording of Tank Level for Liquid-Waste Collection System 16

Viscosimeter 17

Interface Indicator 17

Electronic Pressure Controller 18

Neutron Time-of-Flight Spectrometer 18

Photosynthesis-Luminescence Recorder 19

Quantum Counter for Luminescene Studies. 19

Infrared Microscope 19

Resonance Analyzer 20

Continuous Water Monitor 20

Experimental Geiger Counter Fillings 21

Parallel-Plate Chamber 21

Radiation-Detection Instruments 21

Instrument Construction and Maintenance 21

# LIST OF FIGURES


| | | |
|---|---|---|
| Fig. 1.1 | $4\pi$ Proportional Counter | 3 |
| Fig. 1.2 | $4\pi$ Proportional Counter | 4 |
| Fig. 1.3 | $4\pi$ Proportional Counter — Details | 8 |
| Fig. 1.4 | $4\pi$ Proportional Counter — Assembly | 9 |
| Fig. 1.5 | Precision Pulser Circuit | 11 |
| Fig. 3.1 | Radiofrequency Ion Source | 15 |

# 1. CHEMISTRY DIVISION

**$4\pi$ Proportional Beta Counter for Absolute Disintegration-Rate Measurements** (C. J. Borkowski and T. H. Handley). Coincidence methods can be used for determining absolute disintegration rates of beta-emitting nuclides only if gamma rays are present and the decay scheme is known. Pure beta emitters or nuclides with complex and unknown decay schemes pose a difficult problem for determining absolute disintegration rates. Mica-end-window counters can be calibrated if a source of known disintegration rate is available. Calibration must be made over the range of energies for which the counter will be used. Factors such as shape of the beta spectrum; absorption of beta particles in the air and window of the counters; and air, sample support, and self-scattering are important and vary with energy.

The $4\pi$ proportional-counter method for obtaining absolute disintegration rates described here[1] requires a minimum amount of information about the decay scheme and does not have the disadvantage of the coincidence method in that it can be applied to pure beta emitters. Use of the counter in a $4\pi$ geometry is based on the theory that regardless of the complexity of the decay scheme only one pulse will be obtained for each atom decaying by beta emission. Since a gas amplification of $10^4$ to $10^5$ can be used, all ionizing events producing at least one or two ion pairs in the sensitive volume of the counter will be detected. The method does, however, require the preparation of sources of either negligible or known self-absorption on thin plastic films. For high specific activities and for maximum beta energies greater than about 0.3 Mev, absorption losses in the film can be made negligible. Absolute disintegration rates obtained with the $4\pi$ counter and by coincidence methods were found to agree to within 2%.

Phenomena associated with the scattering of electrons play an unimportant role in the $4\pi$ geometry, since electrons scattered from one counter into the other are recorded as a single event when the two counters are connected in parallel to the input of an amplifier.

(1) Previously reported by C. J. Borkowski at the Conference on Absolute Beta Counting at the National Bureau of Standards, 1949.

*Description of the Counter.* Figures 1.1 and 1.2 show the type of counter used in this study. The center wire, which is made of 1-mil stainless steel, is stretched across a diameter of a pillbox configuration as shown. An aluminum disk, 0.010 in. thick with a ½-in.-diameter hole in the center covered with a thin film of formvar upon which the source is mounted, separates two identical halves of the counter. An O-ring rubber gasket provides a vacuum-tight seal.

Two other counter configurations giving a $4\pi$ geometry were tried. The first was similar to the one shown in Figs. 1.1 and 1.2 except that each half of the counter was hemispherical and a 1-mil wire loop in each half served as the center wire. The second was a cylindrical geometry similar to the one described by Rossi and Staub.[2]

All three counters gave essentially the same disintegration rate on the same source of $P^{32}$ and $Co^{60}$.

With methane at a pressure of 1 atm as the counter gas, a voltage plateau of 200 volts or more with a slope of 1% per 100 volts was obtained at about 2600 volts. With 90% argon and 10% methane at 1 atm, the plateau occurs at 1700 volts. In general, slightly flatter plateaus are obtained with methane as the counter gas.

To obtain flat plateaus in the proportional and semiproportional regions it is important that the amplifier be able to handle pulses from 1 mv to 1 volt without overloading and producing spurious pulses. The Instrument Development Laboratory model 162 proportional amplifier with 1 mv input sensitivity is satisfactory in this application if a germanium diode is used as the counter load impedance.

No conducting coating is necessary on the formvar film if the diameter of the opening in the aluminum separator is kept below ½ in. With a 1-in. opening the collection of positive ions on the formvar reduces the electric field between the source and the wire sufficiently to result in the lowering of the counting rate with time.

(2) B. B. Rossi and H. H. Staub, *Ionization Chambers and Counters*, p. 182, NNES, Div. V, Vol. 2, McGraw-Hill, New York, 1949.

UNCLASSIFIED
PHOTO # 5289

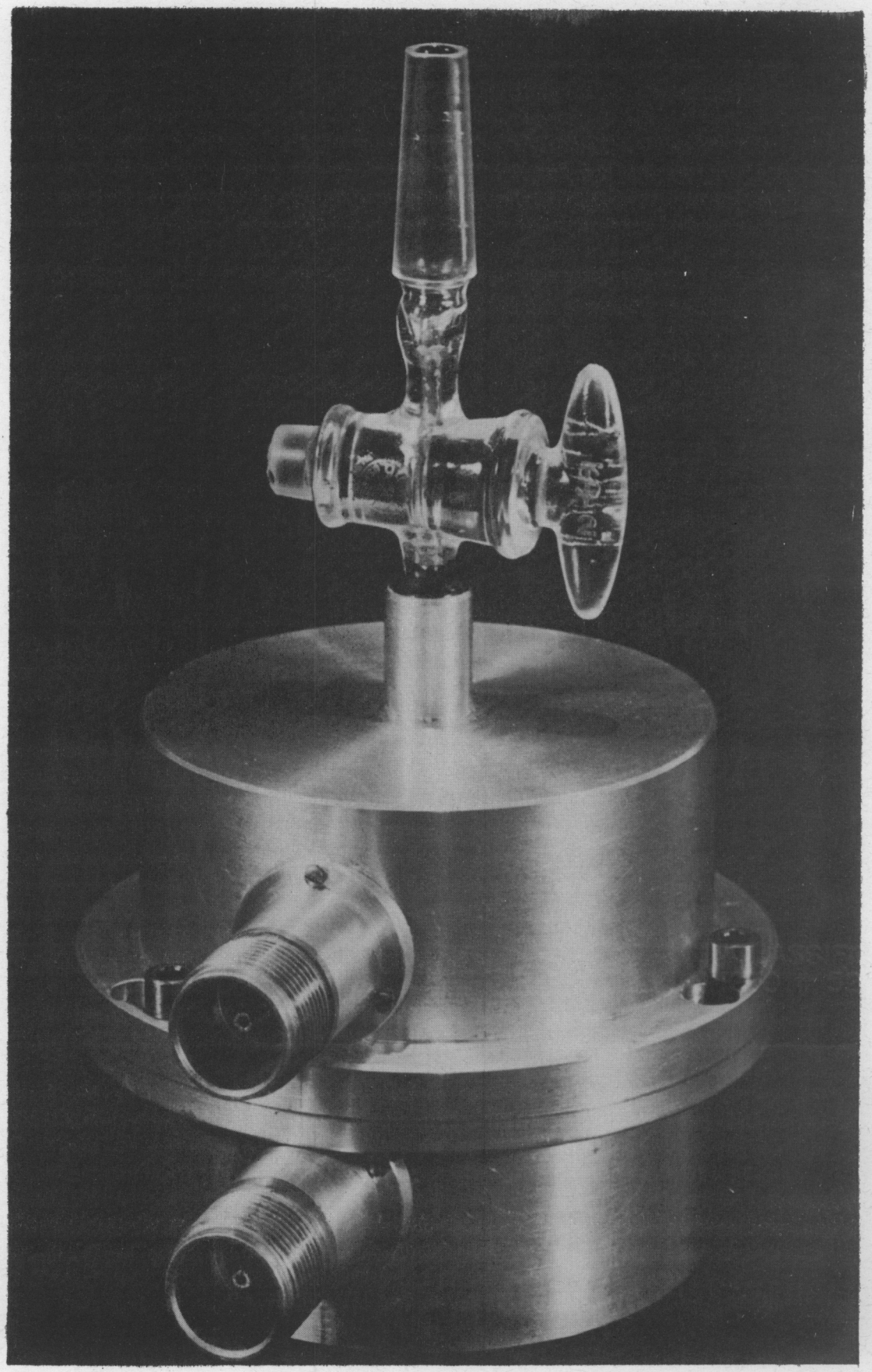

FIG. 1.1 4 $\pi$ PROPORTIONAL COUNTER

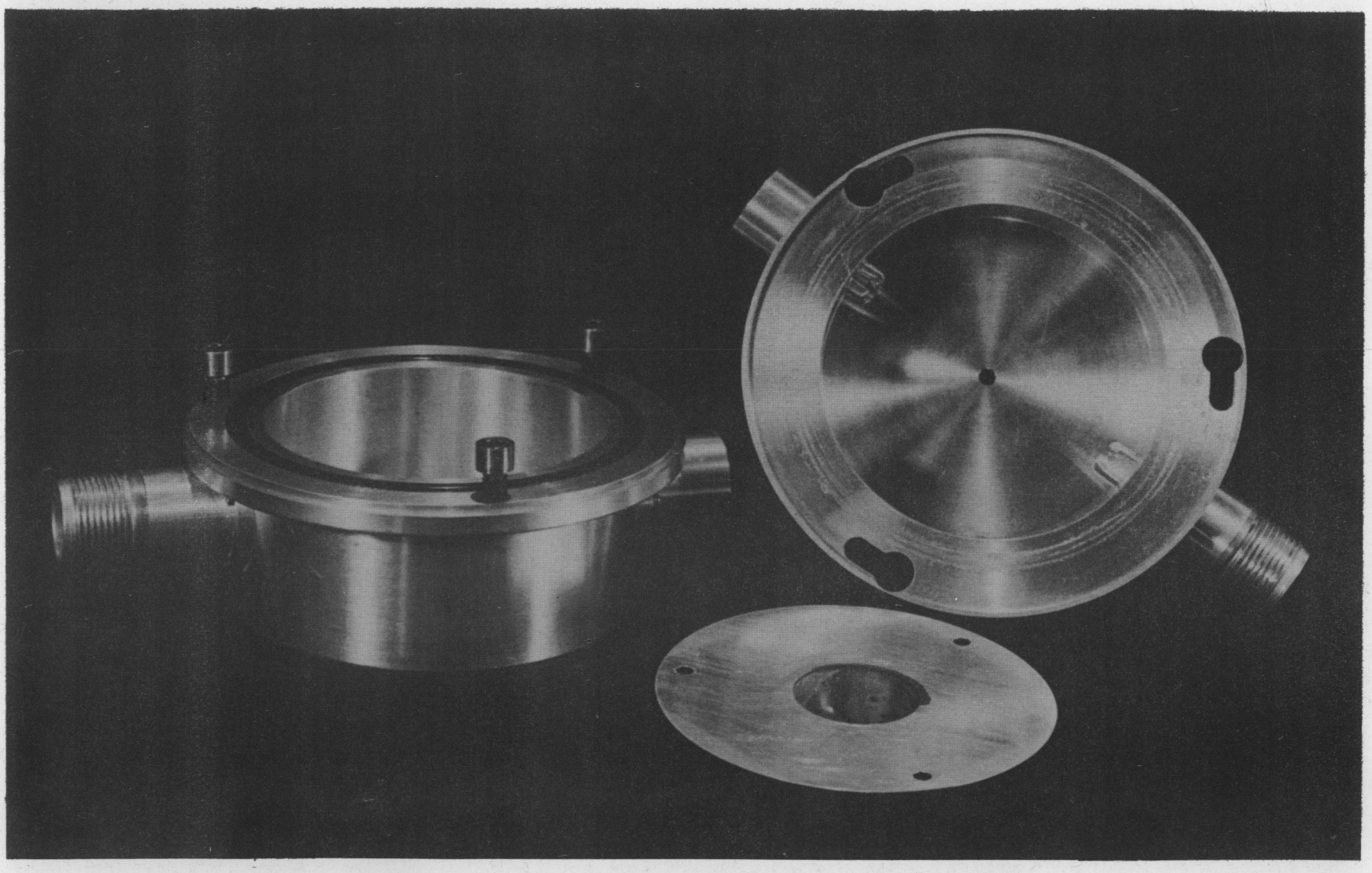

FIG. 1.2 $4\pi$ PROPORTIONAL COUNTER

UNCLASSIFIED
PHOTO # 5290

*Source Preparation.* Since the formvar film is not resistant to acids it is necessary to neutralize or make slightly ammoniacal the solution to be evaporated on the film. For beta energies above 1 Mev, 100-$\mu g/cm^2$ films can be used with negligible absorption. $Co^{60}$ with a maximum beta energy of 0.31 Mev requires a film of 20 $\mu g/cm^2$ to show less than 2% absorption. Uneven evaporation of the sample can result in serious self-absorption errors for soft beta rays even if the total solids is less than 20 $\mu g$.

After the source has been placed in the counter it is evacuated for about 5 min and then filled with methane to a pressure of 1 atm.

*Measurement Procedure and Results.* The two halves of the counter are connected in parallel to the input of the amplifier, and the sample is counted at a voltage midway on the plateau. Each half of the counter can be counted separately to determine the extent of absorption by the formvar film. Background of the counter shielded with 2 in. of lead is 100 c/m. Typical counting data for the $4\pi$ counter using a $Co^{60}$ source mounted on 10-$\mu g/cm^2$ formvar follows:

| | COUNTING DATA (c/m) |
|---|---|
| Top half | 38,600 |
| Bottom half | 38,500 |
| Top and bottom counted together (disintegration rate) | 71,200 |
| Sum of top and bottom | 77,100 |
| Coincidence counting disintegration rate | 72,600 |

Since the counting rate of the two halves of the counter were the same there was negligible absorption in the film. The sum of the counting rates of top and bottom is always greater than the counting rate of the two counted simultaneously because beta particles are scattered from one counter through the film into the other. When the counters are counted separately such a scattered beta particle will be recorded twice, whereas when the counters are connected in parallel only a single count is obtained for each disintegration.

Pure methane has given disintegration rates which are 3% higher for $Co^{60}$ and 7% higher for $Nb^{95}$ than the argon-methane mixture. For hard beta rays the

difference between the two gases in less than 1%. There is no effect of counter-gas filling pressure on the disintegration rate, as can be seen from Table 1.1.

**TABLE 1.1**

**Effect of Methane Gas Pressure on Disintegration Rate**

| PRESSURE (cm Hg) | DISINTEGRATION RATE (c/m) |
|---|---|
| 10 | $2.21 \times 10^5$ |
| 20 | $2.21 \times 10^5$ |
| 40 | $2.22 \times 10^5$ |
| 76 | $2.21 \times 10^5$ |

The voltage plateau shifts with pressure, but the counting rate on the plateau is unchanged.

Saturation backscattering was determined (Table 1.2) for several elements, using a $Co^{60}$ source mounted on thin formvar with the infinitely thick backscatterer in contact with the film. The upper half of the $4\pi$ counter was used with essentially $2\pi$ geometry. For comparison, typical values for 10% geometry using an end-window Geiger-Mueller tube are given in Table 1.3.

The large discrepancy found with the $Nb^{95}$ source was probably due to self-absorption in the source since the specific activity was not very high and a visible amount of solid was present.

**TABLE 1.2**

**Saturation Backscattering Using a $Co^{60}$ Source**

| MATERIAL | $2\pi$ GEOMETRY | 10% GEOMETRY END-WINDOW G-M |
|---|---|---|
| Be | 21% | 7% |
| Al | 35% | 23% |
| Brass | 44% | 52% |
| Pt | 56% | 80% |

**TABLE 1.3**

**Comparison of $4\pi$ Disintegration Rates with Those Determined by Various Methods**

| ACTIVITY | MAXIMUM BETA ENERGY (Mev) | COMPARISON METHOD | DIFFERENCE |
|---|---|---|---|
| $P^{32}$ | 1.7 | End-window Geiger-Mueller counter[3] | 1.0% low |
| $Na^{24}$ | 1.4 | Coincidence counting | 1.0% low |
| $Co^{60}$ | 0.31 | Coincidence counting | 2.0% low |
| $I^{131}$[a] | 0.6 and 0.3 | Coincidence counting | 5% low |
| $Na^{22}$ | 0.57 $\beta^+$ | $4\pi$ geometry ion chamber[4,5] | 1.3% low |
| $Nb^{95}$ | 0.15 | Coincidence counting | 16% low |

(a) In the case of $I^{131}$ the coincidence counting rate was obtained by using the $4\pi$ counter as the beta counter.

A useful application of the $4\pi$ counter is its use as a beta detector in coincidence counting. It eliminates the necessity of an absorption curve when more than one beta is emitted by the nuclide and the resulting uncertain extrapolation to zero absorber which is difficult to reproduce and, in the case of very complex decay schemes, doubtful. Alpha disintegration measurements can also be made with the $4\pi$ counter. An alpha source was evaporated on a 20-$\mu g/cm^2$ formvar film and counted in the $4\pi$ counter, filled with argon-methane at 1 atm and operating at 1000 volts. Alpha absorption in the film was less than 1%. The following results were obtained:

| | ACTIVITY (c/m) |
|---|---|
| Top | 25,400 |
| Bottom | 25,100 |
| Top and bottom counted together | 50,300 |

Figures 1.3 and 1.4 show the construction of the chamber.

(3) L. R. Zumwalt, *Absolute Beta Counting Using End-Window Geiger-Mueller Counters and Experimental Data on Beta-Particle Scattering Effects*, AECU-567 (Sept. 14, 1949).

(4) J. W. Jones and R. T. Overman, *The Use and Calibration of a 100% Geometry Ion Chamber*, MonC-399 (March 20, 1948).

(5) J. W. Cobble, private communication.

UNCLASSIFIED
DWG. C-7534

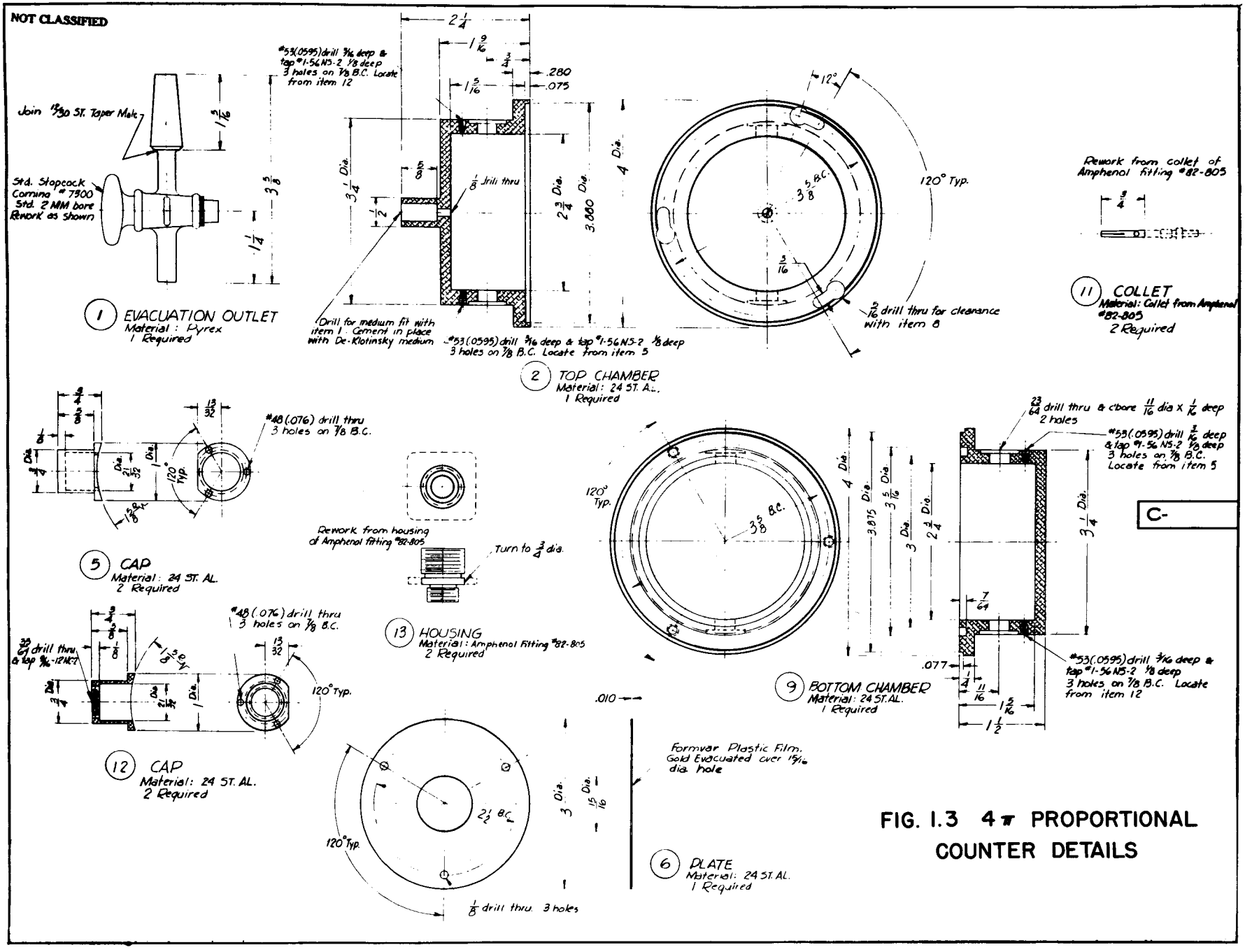


FIG. 1.3 4π PROPORTIONAL COUNTER DETAILS

UNCLASSIFIED
DWG. C-7533

NOT CLASSIFIED

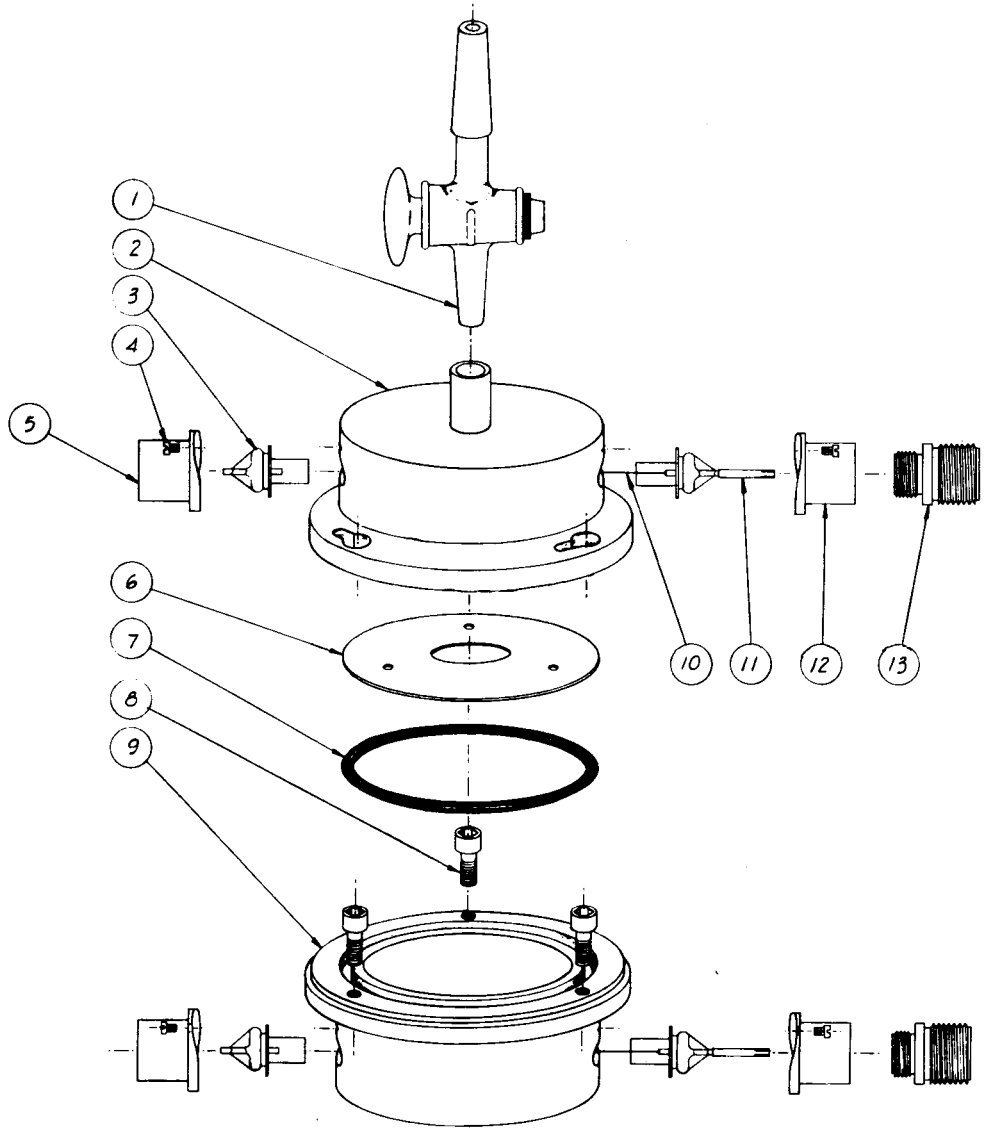


MATERIALS LIST

| ITEM NO. | DWG. NO. | QTY. | NAME | SIZE | MATERIAL |
|---|---|---|---|---|---|
| 1 | C-7534 | 1 | Evacuation Outlet | As Shown | Pyrex |
| 2 | C-7534 | 1 | Top Chamber | 4 Dia. x 2 1/4 | 24 St.Al. |
| 3 | Stock | 4 | Kovar Seal | # 9824 Hollow Electrode | |
| 4 | Stock | 12 | Fillister Head Mach. Screw | # 1-56 NS-2 x 1/8 | Steel |
| 5 | C-7534 | 2 | Cap | 1 Dia. x 3/4 | 24 St.Al. |
| 6 | C-7534 | 1 | Plate | 3 Dia. x .010 | 24 St.Al. |
| 7 | Stock | 1 | "O" Ring | # 12 Parker 5430 | |
| 8 | Stock | 3 | Socket Head Cap Screw | # 10-32 NF-2 x 3/4 | Steel |
| 9 | C-7534 | 1 | Bottom Chamber | 4 Dia. x 1 1/2 | 24 St.Al. |
| 10 | Stock | 2 | Wire | 1 Mil.xlg.as req'd. | S.Stl.Wire |
| 11 | C-7534 | 2 | Collet (from Amphenol) | As Shown | |
| 12 | C-7534 | 2 | Cap | 1 Dia. x 3/4 | 24 St.Al. |
| 13 | C-7534 | 2 | Housing (from Amphenol) | As Shown | |

*NOTE:*
*Item 11 to be sweated on end of Kovar seal*

FIG. 1.4 4π PROPORTIONAL COUNTER ASSEMBLY

**Precision Pulser Circuit** (R. A. Dandl). The pulse generator shown in Fig. 1.5 is a modified version of the one described in the progress report ORNL-788.

The advantages of the modified circuit are improved reliability, incorporation of a system to standardize the pulse voltage, incorporation of a system to normalize the pulse voltage when calibration of the energy axis of a spectrometer is desired, finer control of the pulse voltage, and freedom from spurious pulses, which makes the generator useful for checking the overload characteristics of pulse amplifiers.

Several models of this generator have been in use for almost six months and have proved most reliable.

UNCLASSIFIED
DWG. Q-1109-1

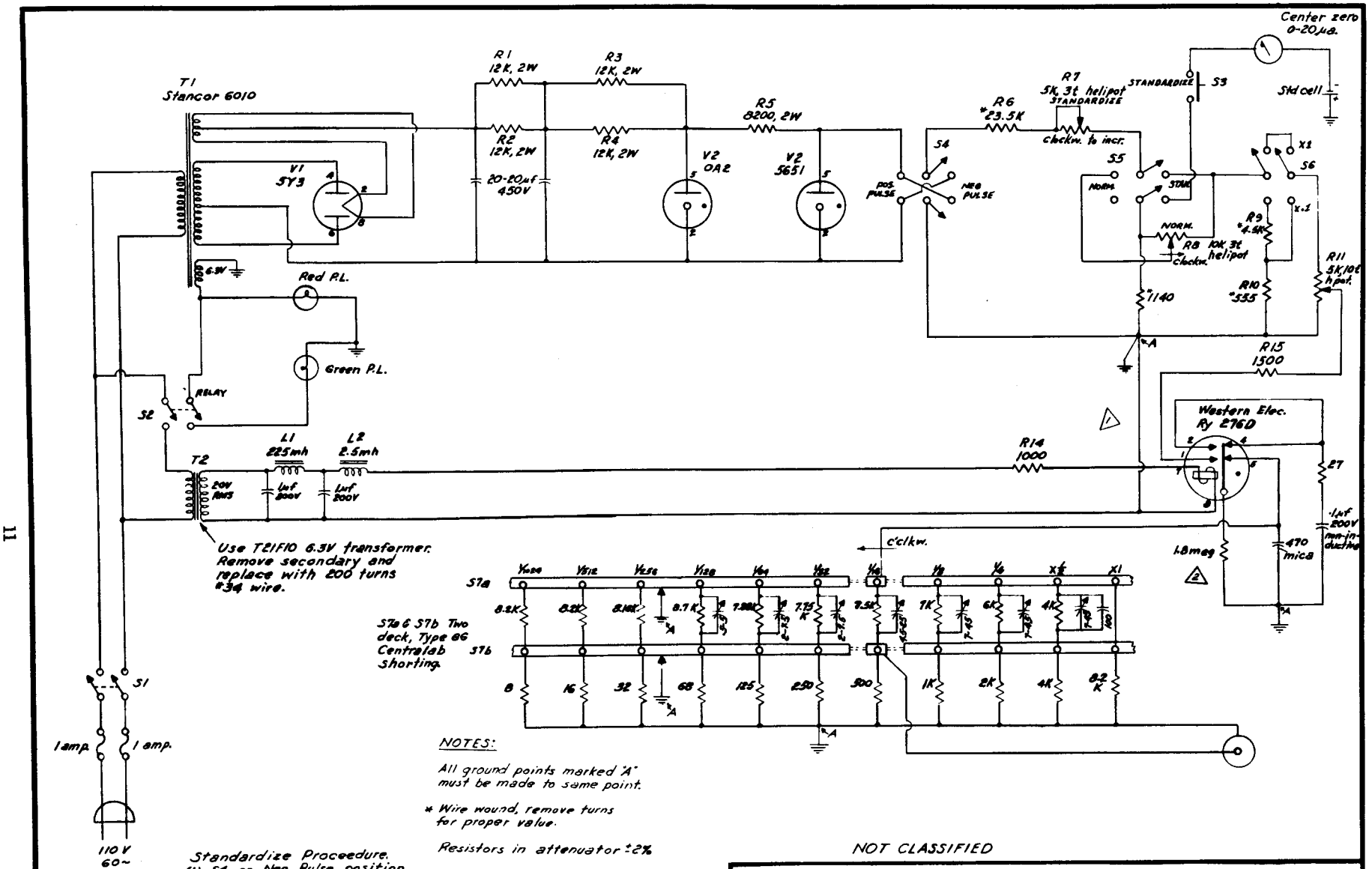


NOTES:

All ground points marked "A" must be made to same point.

* Wire wound, remove turns for proper value.

Resistors in attenuator ±2%

Standardize Proceedure.
(1) S4 on Neg. Pulse position.
(2) S5 on Standardize position.
(3) S2 on Off position.
(4) Press S3 and zero meter with R7.

NOT CLASSIFIED

FIG. 1.5 PRECISION PULSER CIRCUIT

## 2. HEALTH PHYSICS DIVISION

**Constant Water Monitor** (W. M. Hurst). A production design of a constant water monitor has been completed and reduced to drawings, Nos. D-9029 through D-9035, which are on file in the Engineering and Maintenance Division. The drawings describe a continuous-flow water cell of 4 liters/min capacity, a 40-Kev beta-sensitive Geiger-Mueller counter, lead shielding, and control panel. The normal background count rate is about 7 c/m, and water of about $2 \times 10^{-6}$ $\mu$c/ml of $Sr^{90}$ activity is detectable by an approximately 50% increase of the background counting rate

An operating model has been constructed and assembled. It is now monitoring the drinking water supply in room 100, and is under observation for possible faults The present method of recording the count rate uses a scale of 2 and a traffic counter to print 15-min count integrations, totalizing and recycling every hour. The Chemical Technology Division is considering the production design for application to some waste-water monitoring problems on and off the area.

We have been informed by the Patent Office that a patent search discloses no similar art; an application will be made for a U. S. patent covering the features embodied in the water cell and counter assembly.

A preliminary report is to be written, for purposes of record and discussion, on the feasibility of continued effort.

## 3. INSTRUMENT DEPARTMENT

**Van de Graaff Electrodes for Tapered Proton Tube** (R. W. Bennett). Seventy-four stainless steel (type 347) electrodes (drawing Q-913-15) have been fabricated and electrolytically polished. The bores of these electrodes vary from 1.200 to 3.000 in. by 0.050-in. steps. Assembly of these electrodes with the insulator ring (drawing Q-913-13) will be made to form a tapered-bore tube with the smallest bore at the midpoint and gradually enlarging to each end. These same electrodes can be modified to make a constant-bore tube at a later date, if desirable.

**Van de Graaff Low-Impedance Baffle** (R. W. Bennett). An all-stainless-steel low-impedance baffle has been installed on the Van de Graaff vacuum system. The baffles have been so designed that any oil particle must contact at least four refrigerated surfaces before entering the vacuum system proper, and yet the pumping speed through the baffle has not been lowered appreciably. This addition to the existing system completes the fabrication of the main pumping line from stainless steel.

**Cockcroft-Walton Power Supply** (R. F. King). When the new High Voltage Laboratory was assured by the letting of the building contract, it was decided to order now one piece of equipment which will be a part of the Cockcroft-Walton power supply in that building, i.e., an insulating transformer for supplying power to the ion source and associated equipment at the tube terminal. Bids are being received on a 5-kva single-phase 460/120 volt 60-cycle transformer having an impedance of 20% or less and having insulation for 600 kv between the 120-volt secondary and primary and between the secondary and the case.

The work of adding an additional stage of 100 kv to the Cockcroft-Walton supply is nearly completed, although it is likely that operation will have to be resumed at 300 kv maximum until special insulating belts needed to drive two filament generators in the added stage are delivered. The supplier shipped the wrong belts for this job a few weeks ago and the right ones have not yet been received.

One item of equipment that will be a part of the 600-kv generator in the new building is four sections of a six-section high-accuracy oil-filled

voltmeter multiplier which has been built and will be used on the 400-kv unit. Another item is the portable control console.

**Radiofrequency Ion Source** (H. Reese, Jr.). Construction of the radiofrequency ion source has been simplified and changed slightly to give longer life but basically is the same as described in a previous quarterly report (ORNL-924, p. 32 ). Figure 3.1 is a cross-section drawing of the source now in use. Arrangements are being made to make the pyrex vessel obtainable from Radiation Counter Laboratories, Inc. at a nominal cost. A complete discussion of the source will soon be submitted to *Nucleonics* for publication.

**Electrostatic-Lens Development** (R. O. Case, Jr.). The preliminary design has been completed for an electrostatic lens for the Van de Graaff accelerator to meet the following specifications: (1) a focal spot on the target of not greater than 2.0 mm diameter for all values of terminal potential between 0.4 and 3.0 million volts, (2) all values of ion-source probe voltage between 0.5 and 4.0 kv, and (3) all values of beam current between 0 and 100 $\mu$a. Sketches of the two electrodes required have been made, and the lens assembly will be fabricated as soon as the shop schedule permits. It is anticipated that some modifications in design will have to be made after installation and testing of the first design.

The preliminary design has been completed for an electrostatic lens for the Cockcroft-Walton accelerator to meet the following specifications: (1) a focal spot of not greater than 2 mm diameter for all values of terminal potential between 50 and 400 kv, (2) all values of probe voltage between 0.5 and 4.0 kv, and (3) all values of beam current between 0 and 1.0 ma. The two lens elements have been fabricated and installed and are now under test.

**Continuous Proportional Sampling for Liquid-Waste Disposal** (T. M. Gayle). Seven strategic locations have tentatively been selected for flow metering and continuous sampling in the waste-piping network at ORNL. Flow metering, together with continuous sampling at the locations selected, will provide an accurate accounting of both flow volume and activity for each building or group contributing waste to the system.

Weirs have been installed at each location and directly connected float type recorder-integrators will be used in conjunction with each weir.

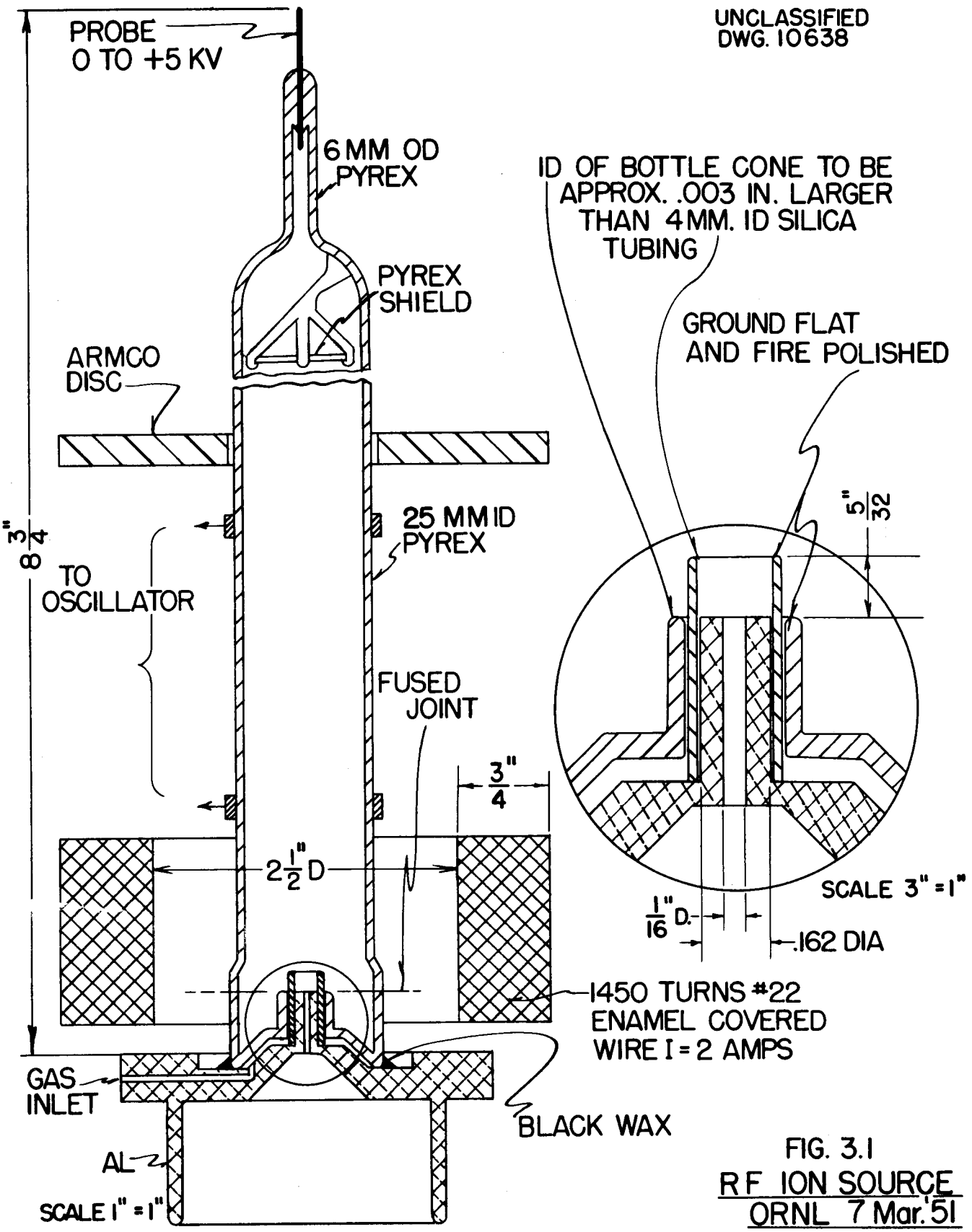


FIG. 3.1
RF ION SOURCE
ORNL 7 Mar. '51

A simple and accurate proportional sampler was provided by the use of a small pump driven by a variable-speed d-c motor. The d-c motor, together with its rectifier-control unit, was purchased from Servo-Tech Products Company. A 1-megohm bias control potentiometer in the control circuit was replaced directly with a very-low-torque 75,000-ohm potentiometer which in turn was mechanically coupled to the float. The result is a motor speed directly proportional to the measured flow rate to at least 2% accuracy.

The pump selected is of the positive-displacement type of rather unusual design. Manufactured by E & M Enterprises, Inc., the pump employs standard rubber or plastic tubing as the "driven element." Continuous alternate "squeezing" of the tubing produces a flow directly proportional to the speed provided by the d-c motor previously described. Wide ranges in flow may be selected by using various tubing sizes. Proportional samples of flow at each weir may easily be provided in units from 1 quart to 10 gal or more per 24 hr.

The entire sampling equipment is relatively compact and will be housed at ground level directly above the weir. One complete sampling unit has been fabricated and completely tested and will be installed in the near future.

**Remote Recording of Tank Level for Liquid-Waste Collection System** (T. M. Gayle). Remote level recording was desired on 20 liquid-waste collection tanks located throughout ORNL. The majority of the tanks are under no pressure and are provided with floats and suitable indicating scales at ground level directly above the tanks. The system uses two 12-point potentiometer recorders located at the evaporation house and connected for Wheatstone bridge measurement. One-thousand-ohm Helipots, 10-turn, connected by suitable small chain-sprocket arrangements to the existing indicating rods, provided the variable bridge arm of the circuit. Extremely accurate recording on a mock-up installation has been easily obtained.

Several tanks in the system were under pressure and naturally precluded the use of any simple float arrangement. The back-pressure measurement method, employing a small air purge, was being used for indication of level at each of these tanks. It was decided that the standard Brown Instrument Company Pressuretrol could be used to provide the linear variation in the 1000-ohm resistance on these installations. The Pressuretrol is a bellows-driven wire-wound resistance provided with suitable linkage adjustments for proportional

band changes. Although this instrument is designed primarily for air-conditioning work, its simplicity and flexibility indicate its use as an economical solution to many instrument problems. Applicable ranges for all installations were selected from standard models.

All tank records will be made 0 to 100% of chart, corresponding to percentage tank level. This is advantageous since the operator is primarily interested in percentage level only for each tank. A high-level alarm has also been provided on each of the two recorders in case any point should exceed approximately 95% of chart.

One recorder has been installed; the majority of the remaining components have not been delivered.

**Viscosimeter** (K. H. Kline). Instrument Q-1164 is designed to measure the viscosity of opaque liquids using the falling-ball method. This is accomplished by using a gamma-emitting radioactive (tantalum) sphere as the falling ball and measuring its rate of fall between two fixed Geiger-Mueller tubes. As the ball passes in front of each tube, successively, a mark is made on a Brush type 902 magnetic recorder. Since the recorder chart moves at a constant rate, the distance on the chart between successive marks is then an indication of the time required for the ball to fall between the two tubes and therefore a measure of the viscosity of the fluid through which the ball is traveling. The instrument is to be used principally in measurements on liquid metals by the Reactor Technology Division.

**Interface Indicator** (K. H. Kline). Instrument Q-1129, assembled for the Chemical Technology Division, is a device designed to indicate the position of an interface between two immiscible liquids of different specific gravities within a given container, in this case an ion-exchange column. The instrument is a capacity bridge and uses a concentric rod and cylinder 6 in. long submerged in the liquids as a measuring assembly. The solutions must meet one of two sets of conditions for the instrument to work properly: (1) if one solution is conducting, the other must not be, and (2) if both solutions are nonconducting, they must have different dielectric constants. The reason for these conditions is that a change of interface position in the detector assembly must make a change in electrical capacity between the rod and cylinder, causing an unbalance of the bridge. The output of the bridge is then rectified

and the resultant d-c voltage is applied to a Brown strip chart recorder as an indication of the position of the interface.

**Electronic Pressure Controller** (B. Hildebrant). In this instrument variations in pressure cause a change in capacitance between a fixed plate and the pressure-controlling leg of a mercury manometer. This capacitance change shifts the frequency of an oscillator which is detected by a Foster-Seely type of discriminator, the output of which is fed through a Brown amplifier and motor to operate a pump in such a direction as to wipe out the pressure variation. The pump is a ground glass plunger in a tube operated by a screw feed from the Brown motor.

At present the instrument is used to control gas pressure to high accuracy ($\pm 10^{-3}$ mm Hg). Other possible uses are as a pressure-measuring device, in which application the output of the discriminator would operate a meter calibrated directly in pressure change from reference; in measuring dielectric constant; as a high-accuracy micrometer; and in many other cases in which small relative motions are to be detected, measured, and/or controlled.

**Neutron Time-of-Flight Spectrometer** (I. D. Groves). The time-of-flight neutron spectrometer being constructed for the Physics Division is modeled after the one at Argonne. It has a mechanically driven shutter which breaks the neutron beam into bursts, the lengths of which vary directly with the angular speed of the rotor. These resulting bursts of neutrons may contain neutrons of any energy above a certain "cutoff" value as determined by the speed of the rotor.

The spectrometer action is obtained in this instrument electronically by generating, at the instant the shutter is open, i.e., at the start of the neutron burst, an electrical pulse which actuates the electronic equipment. The pulses are counted in one of 84 scaling channels, a scale of eight in each channel. The particular channel in which the pulses are counted is determined by the time elapsed from the opening of the slot. If the detector chamber is placed a known distance from the rotor, each channel will count all neutrons having energies between two limits, and all neutrons whose energies are above cutoff will be counted by energy, hence the spectrometer action. Neutrons of the burst are detected by a $BF_3$ chamber. The electronic unit is housed in three relay racks. A fourth rack contains the power distribution controls and the electronic control for changing the speed of the rotor.

The electronic parts of the electrometer are now complete.

**Photosynthesis-Luminescense Recorder** (J. B. Davidson). This instrument was designed and constructed in cooperation with Dr. W. A. Arnold of the ORNL Biology Division. It consists of an a-c-operated photomultiplier which is synchronized with the pulses from a synchronously driven shutter—projection lamp light source. While the plants under examination are being illuminated the photomultiplier is insensitive, but when the illuminating light is off the photomultiplier responds to the light given off by the plants. The pulsating signal is fed into a filter network and is detected on a modified Q-826 electrometer. The output of the electrometer is recorded on one point of a two-point Brown recorder. The other point of the recorder is connected to the output of a strain-gage manometer (see Instrument Department quarterly report ORNL-796). This manometer measures the oxygen pressure, and therefore the rate of photosynthesis, in the Warburg vessel containing the green plants. Although the instrument operated satisfactorily, difficulties have been experienced with the phosphorescence of the glass vessels, the light filters, and the photomultiplier envelope itself. This phosphorescence constitutes a noise or background which partially masks the desired signal.

**Quantum Counter for Luminescence Studies** (J. B. Davidson). A sensitive light-measuring instrument was requested by Dr. B. L. Strehler of the ORNL Biology Division for use in studies of light production in plants and other chemiluminescent phenomena. A quantum counter was assembled using the following components: A light-tight housing for the 1P22 photomultiplier with provision for admission of samples to be studied without subjecting the tube to room light and having a specially constructed Dewar flask with a small unsilvered window for cooling the tube with liquid nitrogen; an A-1A preamplifier, an A-1 amplifier, a scaler, a logarithmic count rate meter, and a Brown recorder. Provision is made for switching the output of the photomultiplier to a linear d-c electrometer for measuring larger amounts of light.

**Infrared Microscope** (J. B. Davidson). A conventional light microscope is being modified for use with both the American Type 1P25 and the British Type CV-138 infrared image tubes. Holders for these tubes have been designed to fit directly in the place of the existing binocular lens system which is readily removed. The machine work on the holders is about completed. A high-voltage supply to furnish the accelerating and focusing potentials is to be built.

**Resonance Analyzer** (W. G. Stone). This project with most of the equipment has now been moved from Y-12 to Building 3500, X-10. Since the fore pump and booster pump were not moved, a new vacuum system has been built up; it is operating satisfactorily.

Many attempts were made to use the base of a loctal tube for electrical lead-ins before one was successful, owing to the fact that this glass can be reworked only with great difficulty. This one tube broke shortly thereafter because of the magnetic pull on the iron alloy lead-in wires. A tube was constructed using tungsten lead-ins, but the plates were badly oxidized during annealing of the glass. A new tube is under construction with a tapered glass joint between the seal and the glass envelope which, it is hoped, will avoid this difficulty. This new tube will also have a grid to control the ionizing electron-beam current so that the electron flow will be space-charge-limited rather than emission-limited, which should reduce electron noise by a factor of 15 to 20.

In the meantime, attempts are being made to make a resonant amplifier having better stability of gain than commercial radio receiver circuits.

**Continuous Water Monitor** (R. K. Abele). In connection with the Plan H waste-disposal program it was considered necessary to have a continuous water monitor which would be located at a manhole in the "cold" water waste system to pick up any activity that may have been inadvertently discharged into this system. This was to be a recording device, and the detector should have been capable of working at a low range of 100 beta counts per minute. The recorder would have given a means of determining the time of occurrence of a surge in activity.

The device as built is an adaptation of a water monitor in use at the K-25 plant. Three mica-end-window Geiger-Mueller counters, connected in parallel but with a separate voltage adjustment for each counter, are positioned above three separate water cups through which there is a continuous flow of water. The counters have a fused glass seal of metal to mica. The counters and cups are enclosed in 2 in. of lead shielding. In the shield the total background count is approximately 60 counts per minute. The output of the counters is fed into a Q-851 logarithmic count-rate meter and from the count-rate circuit into a Brown recorder. The count-rate circuit has up to five decades of range.

This device has not yet been placed in operation.

**Experimental Geiger Counter Fillings** (R. I. Luman). Experimental fillings of Geiger counters are being tried using mixtures of isobutane, cyclopropane, and propylene with argon and helium. Preliminary work indicates that cyclopropane and argon in the ratio of 1 to 9 gives a counter operating at approximately 900 volts with good plateau characteristics. Life tests will be run on some of these.

**Parallel-Plate Chamber** (R. E. Zedler). A counting ionization chamber has been designed for use with the neutron shutter experiment being performed by G. S. Pawlicki. It was attempted to purify normal $BF_3$ by low-pressure fractional distillation using liquid nitrogen. Some degree of purity was obtained but it was deduced that the $BF_3$ was being contaminated by the glass system and the Apiezon N grease being used, and an all-metal vacuum system is being built to overcome this difficulty. The chamber is being equipped with a plate containing fissionable material in order to perform certain tests.

**Radiation-Detection Instruments** (R. I. Luman). During the period of this report 28 special ionization chambers and 42 special counters in addition to the standard detection devices were built for the research divisions. Three scintillation counters were built and 38 jobs were completed using the vacuum coating unit. These consisted largely in coating plastics with aluminum or gold.

**Instrument Construction and Maintenance** (W. J. Ladniak). The following instruments were built in the Instrument Fabrication Shop for use in research work:

| | |
|---|---|
| Scalers (neutron spectrometer) | 11 |
| Servo amplifiers | 3 |
| Scintillation counters | 8 |
| Neutron survey meters | 3 |
| Dual electrometers | 1 |
| Air monitors | 5 |
| Magnet amplifiers | 4 |
| Sigma amplifiers | 7 |
| Transducer amplifiers | 12 |
| Pile period meters | 5 |
| Servo power supplies | 3 |
| Log count-rate meters | 9 |
| Period amplifiers | 4 |

| | |
|---|---|
| Buss panels | 3 |
| Power supplies | 4 |
| Filtrons | 1 |
| Electrometers | 2 |
| A-1 amplifier calibrators | 1 |
| Pile period simulators | 2 |
| Pile period amplifiers | 1 |
| 1024 scalers | 2 |
| Negative high-voltage supplies | 12 |
| X-ray diffraction spectrometers | 1 |
| Total | 104 |

Besides the above work, 23 preamplifiers were built, Monitron, $BF_3$ counter, A-1A, Servo, and safety preamplifiers. Six Atomic Instrument Scalers were modified to improve the performance of the instruments. Seventeen special instruments were built for various groups throughout the plant. The servicing report is as follows:

| MONTH | NO. OF INSTRUMENTS SERVICED | NO. OF FAILURES |
|---|---|---|
| January | 231 | 611 |
| February | 233 | 567 |
| March | 195 | 556 |
| Total | 659 | 1734 |

The percentages of instrument failures due to various causes were:

| | % OF TOTAL |
|---|---|
| Transformers replaced | 1.1 |
| Geiger-Mueller | 6.9 |
| Filter condensers replaced | 2.3 |
| By-pass condensers replaced | 1.9 |
| Resistors replaced | 3.7 |
| Vacuum tubes replaced | 33.5 |
| Instruments calibrated | 4.3 |
| Miscellaneous | 46.3 |
| | 100 |