UNCLASSIFIED

ORNL-485

PHYSICS-INSTRUMENTATION

MARTIN MARIETTA ENERGY SYSTEMS LIBRARIES

3 4456 0360459 8

CENTRAL RESEARCH LIBRARY
DOCUMENT COLLECTION

LIBRARY LOAN COPY

DO NOT TRANSFER TO ANOTHER PERSON

If you wish someone else to see this document, send in name with document and the library will arrange a loan.

HEALTH PHYSICS DIVISION

INSTRUMENT DEVELOPMENT

PORTABLE FAST NEUTRON SURVEY METER

BY

G. S. HURST

OAK RIDGE NATIONAL LABORATORY
OPERATED BY
CARBIDE AND CARBON CHEMICALS CORPORATION
FOR THE
ATOMIC ENERGY COMMISSION
OAK RIDGE, TENNESSEE

UNCLASSIFIED

UNCLASSIFIED

ORNL-485
Health Physics

This document consists of
10 pages.

Copy 7 of 149.
Series A.

Issued: _____

HEALTH PHYSICS DIVISION

INSTRUMENT DEVELOPMENT

PORTABLE FAST NEUTRON SURVEY METER

BY

G. S. HURST

OAK RIDGE NATIONAL LABORATORY
Operated By
Carbide and Carbon Chemicals Corporation
for the
Atomic Energy Commission
Post Office Box P
Oak Ridge, Tennessee

DATE ISSUED:

NOV 2 - 1949

MARTIN MARIETTA ENERGY SYSTEMS LIBRARIES
3 4456 0360459 8

UNCLASSIFIED

ORNL 485
Physics-Instrumentation

OAK RIDGE NATIONAL LABORATORY INTERNAL DISTRIBUTION:

1. G. T. Felbeck (C&CCC)
2-3. 706-A Library
4. 706-B Library
5. Biology Library
6. Health Physics Library
7-8. Training School Library
9-12. Central Files
13. J. A. Swartout
14. J. H. Gillette
15. A. Hollaender
16. J. H. Frye, Jr.
17. E. J. Murphy
18. C. N. Rucker
19. W. D. Lavers
20. A. M. Weinberg
21. S. A. Reynolds
22. F. C. VonderLage
23. J. S. Felton
24. G. S. Hurst
25. W. M. Hurst
26. K. Z. Morgan
27. Forrest Western
28-34. Central Files

OAK RIDGE NATIONAL LABORATORY EXTERNAL DISTRIBUTION:

35-43. Argonne National Laboratory
44. Armed Forces Special Weapons Project
45-47. Atomic Energy Commission, Washington
48. Battelle Memorial Institute
49-57. Brookhaven National Laboratory
58. Bureau of Medicine and Surgery
59. Bureau of Ships
60-63. Carbide & Carbon Chemicals Corp. (K-25)
64-67. Carbide & Carbon Chemicals Corp. (Y-12)
68. Chicago Operations Office
69. Cleveland Area Office
70. Columbia University (Dunning)
71. Columbia University (Failla)
72. Dow Chemical Company
73-78. General Electric Company, Richland
79-80. Hanford Operations Office
81. Idaho Operations Office
82-83. Iowa State College
84. Kansas City
85-88. Knolls Atomic Power Laboratory
89-91. Los Alamos
92. Mallinckrodt Chemical Works
93. Massachusetts Institute of Technology (Gaudin)
94. Massachusetts Institute of Technology (Kaufmann)
95-97. Mound Laboratory
98-99. National Advisory Committee for Aeronautics
100-101. National Bureau of Standards
102-103. Naval Radiological Defense Laboratory
104-106. NEPA Project
107. New Brunswick Laboratory
108-112. New York Operations Office
113. North American Aviation, Inc.
114. Patent Advisor, Washington
115. Rand Corporation
116. Sandia Base
117. Sylvania Electric Products, Inc.
118-132. Technical Information Branch, ORE
133. U.S. Public Health Service
134. UCLA Medical Research Laboratory
135-139. University of California Radiation Laboratory
140-142. University of Rochester
143. University of Washington
144-145. Western Reserve University (Friedell)
146-149. Westinghouse

PORTABLE FAST NEUTRON SURVEY METER

by
G.S. Hurst

During the development of a Health Physics fast neutron dosimeter, it appeared that a simplified instrument could advantageously be put into operation. A test model has been made of such an instrument, capable of detecting neutron fluxes (0.1 to 10 Mev energy) ranging from 10 to 10,000 neutrons/cm^2/sec. The basic elements are a recoil proportional counter, a single stage amplifier, and a thyratron rate meter circuit. In its present form, the instrument is insensitive to gamma (radium) intensities less than 1 r/hr. Another decided advantage of this instrument is the small physical size of the single detecting unit. Although the instrument is in an early stage of development, details sufficient for its reproduction will be given.

Proportional Counter

The proportional counter used in this application is the same as the counter designed for the neutron dosimeter discussed elsewhere[1]. Briefly, it is made of a cylinder with a radius of 2.5 cm and 7 cm length.

---

(1) "Fast Neutron Measurements for Health Physics" by G.S. Hurst, RA-DET, Vol. 2, No. 4, September, 1949.

To limit electron pulse heights, a brass partition is located in the center of the cylinder. The neutron entry end of each segment is coated with paraffin, as required by the Bragg-Gray principle. When filled to two atmospheres methane pressure, a one-half mil stainless steel collector wire held at 2100-2400 volts potential renders the counter operative in the proportional region. Detailed drawings of the counter construction are attached[2]. (Figures 1-4).

Circuitry

With the available gas amplification in the proportional counter, a single stage amplifier (1U4) provides enough gain to fire a RK-61 thyratron tube. The inherent simplicity of this circuit arises from the fact that the gamma ray electron pulse may be made too small to operate the thyratron. This is accomplished by adjusting the amplifier gain or the collector voltage. In the attached circuit diagram (Figure 5) is shown a rate meter circuit[3], capable of covering the range of 10 to 10,000 neutrons/cm^2/sec on a single scale. Although this circuit has the advantages of light weight and simplicity, it will be replaced by a three-range linear out-put meter in favor of increased

(2) Two additional details should be noted. (a) Thermo-plastic insulators must be avoided due to their foreign gas contribution, and (b) Tank methane should be purified by freezing with liquid nitrogen, then pumping off vapour pressure for about two minutes. This was suggested and done by Mr. Ralph Luman of this Laboratory.

(3) This circuit is based on suggestions by Mr. R.A. Dandl of this Laboratory.

accuracy. The amplifier circuit is stable with respect to battery voltage changes. However, the plate supply voltage to the thyratron, and proportional counter collector voltage should be well regulated. It is recommended that a separate battery be used for the RK-61 plate supply.

Calibration

No experimental work has been done to determine the energy dependence of this counter. Attempts will be made in future work to construct a dosimeter based entirely on counting rate measurements. The primary considerations involved are: (1) The number of neutrons required to give a tolerance dose decreases as the neutron energy increases - this means that the counter sensitivity must increase as the neutron energy increases, (2) The neutron scattering cross-section for hydrogen decreases as energy increases, and (3) The range of protons in paraffin increases with increasing energy - this more than compensates for the decrease in sensitivity due to decreased cross-section.

Calibration is done with a source placed such that neutrons enter the counter only by first passing through the paraffin. Since the meter is not linear, a source capable of covering the entire working range of fluxes must be available. The counter is directional to the extent that the paraffin end sensitivity is approximately twice the side entry sensitivity. Ear phones may be used for calibration of fluxes less than 10 neutrons/cm^2/sec.

GSH:r

DWG. #7852

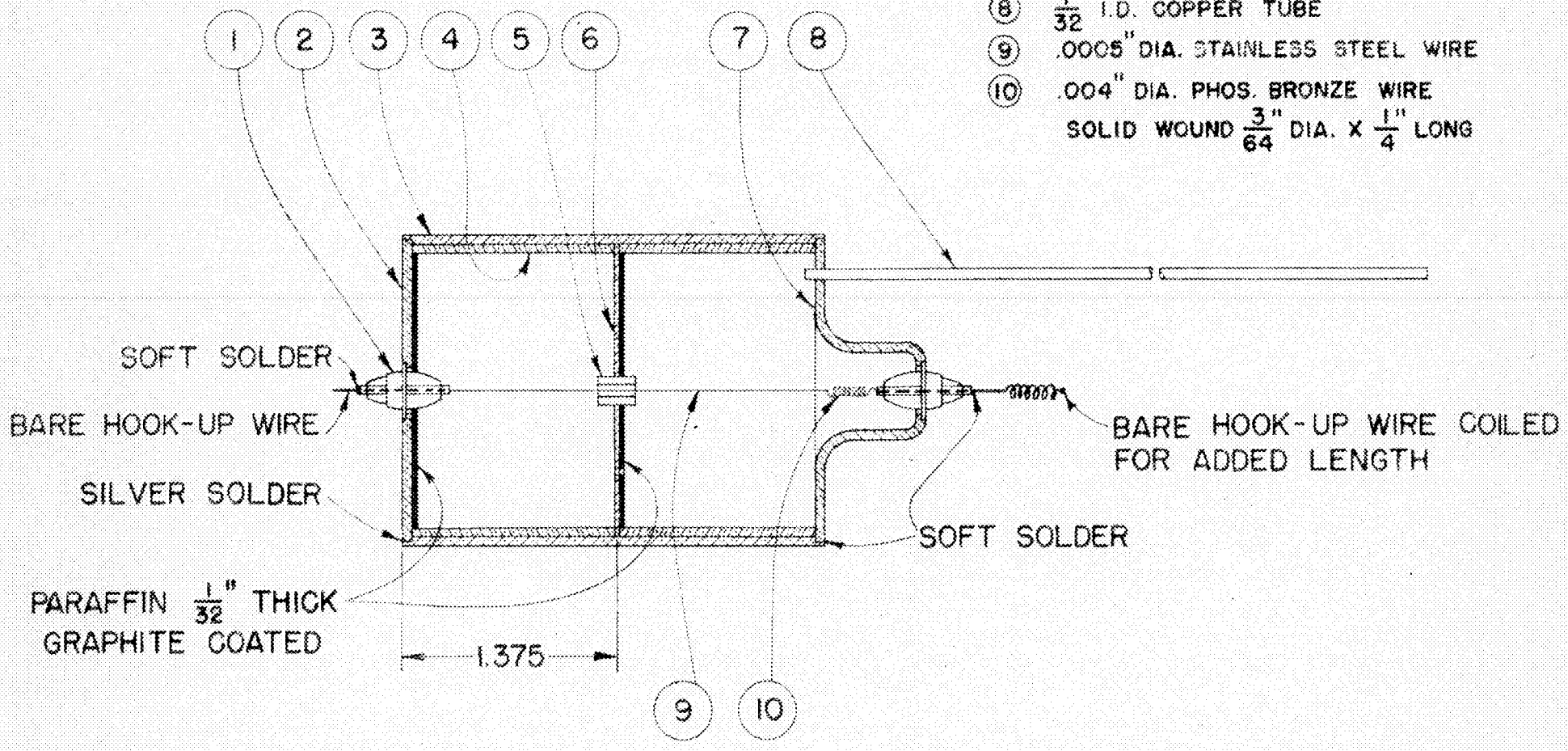

PROPORTIONAL COUNTER
ASSEMBLY
FIG. 1

DWG. #7853

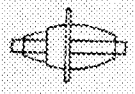

(1) GLASS - KOVAR SEAL
2 REQ'D.

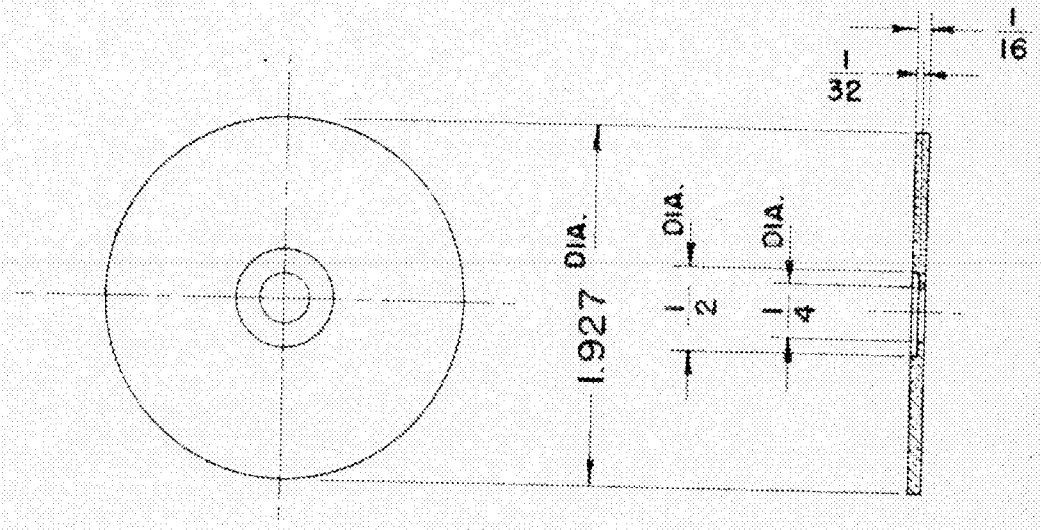

(2) MAT'L. BRASS
1 REQ'D.

PROPORTIONAL COUNTER
DETAILS
FIG. 2

DWG. #7854

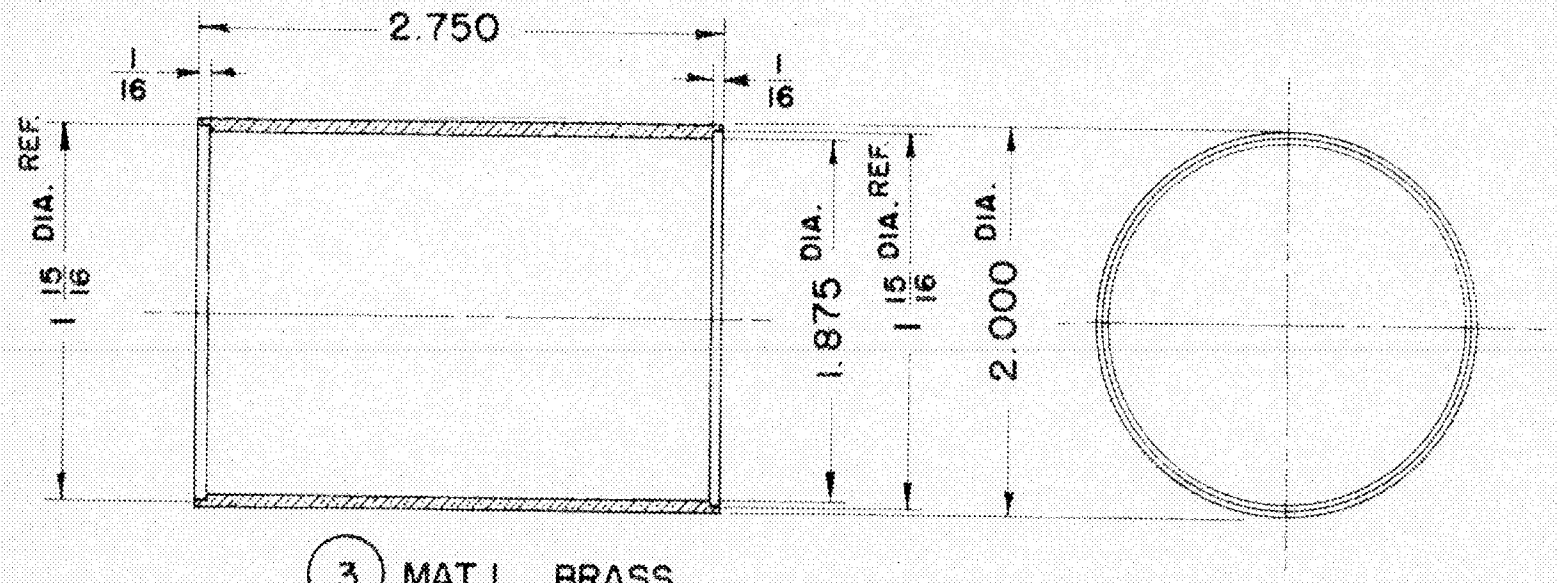

(3) MAT L. BRASS
1 REQ'D.

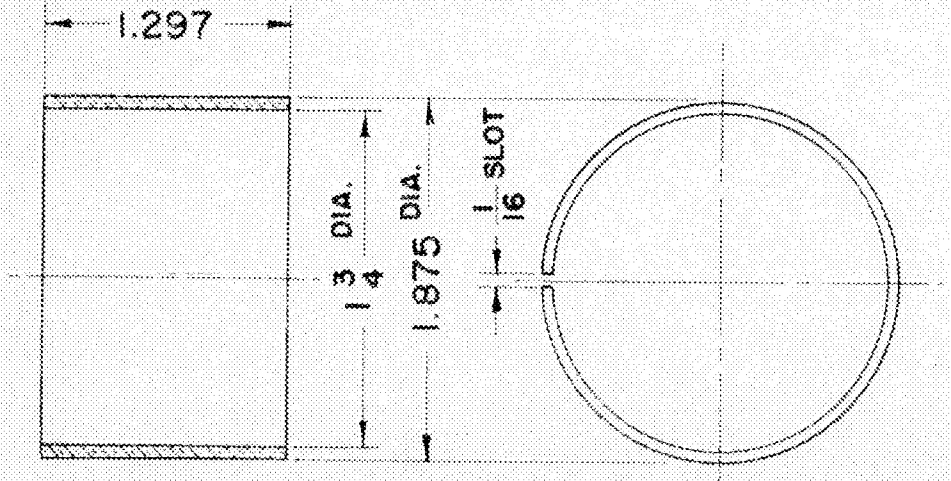

(4) MAT L. BRASS
2 REQ'D.

PROPORTIONAL COUNTER
DETAILS
FIG. 3

DWG. #7855

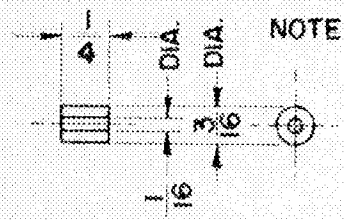

NOTE: DIMENSIONS APPROX.

(5) MAT'L. GLASS TUBE
1 REQ'D.

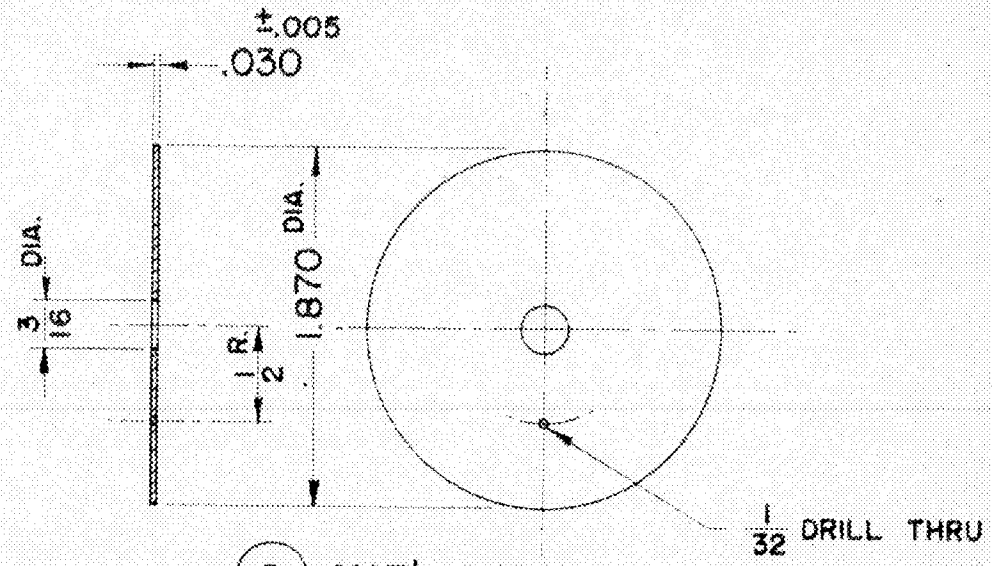

(6) MAT'L. BRASS
1 REQ'D.

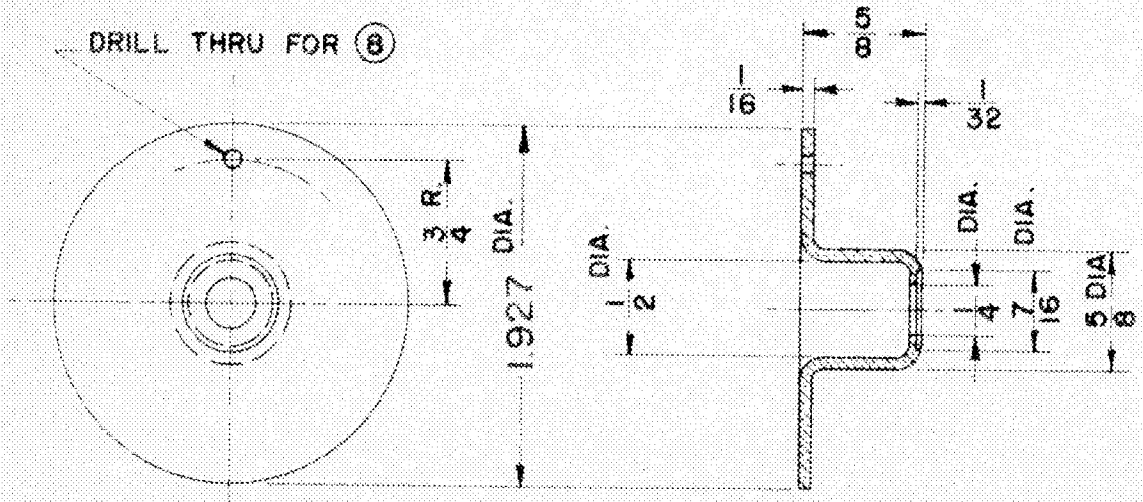

(7) MAT'L. BRASS
1 REQ'D.

PROPORTIONAL COUNTER
DETAILS
FIG. 4

DWG. #7856

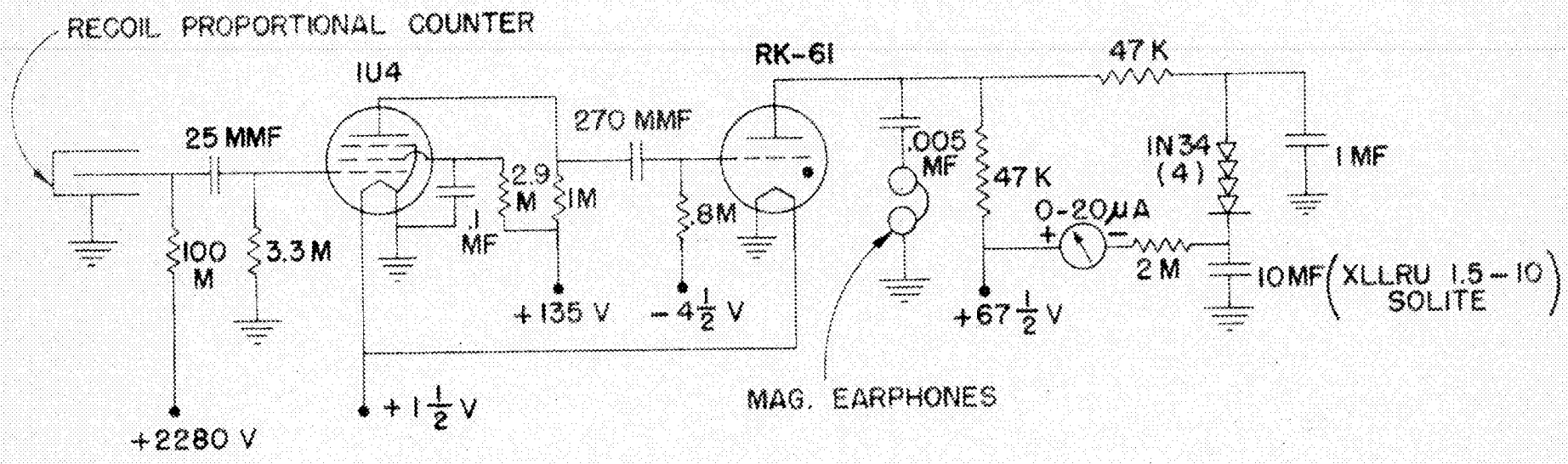

FAST NEUTRON SURVEY METER

SIMPLIFIED VERSION #2

FIG. 5